The 4th European sCO_2 Conference for Energy Systems
March 23-24, 2021, Online Conference

2021-sCO2.eu-150

GREENING A CEMENT PLANT USING sCO_2 POWER CYCLE

Ladislav Vesely*
Center for Advanced Turbomachinery and Energy Research (CATER), University of Central Florida
Orlando, FL, 32816
Email: Ladislav.Vesely@ucf.edu

Prabu Thangavel
PSG college of technology, Peelamedu, Coimbatore,
India 641004

S. Gopinathan
Consultant, Bangalore,
India, 560094

Otakar Frybort
Research Centre Řež, Husinec, Czech Republic

Ganesan Subbaraman
Center for Advanced Turbomachinery and Energy Research (CATER), University of Central Florida
Orlando, FL, 32816
&
PSG College of Technology, Peelamedu, Coimbatore,
India 641004

Jayanta Kapat
Center for Advanced Turbomachinery and Energy Research (CATER), University of Central Florida
Orlando, FL, 32816
&
PSG College of Technology, Peelamedu, Coimbatore,
India 641004

ABSTRACT
This paper presents a case study for the greening of a cement plant located in India. Operating characteristics of the plant are described as well as sustainability actions previously undertaken to meet power requirements supplied by one of two subcritical coal boilers with renewables (photovoltaic and wind) and use of Municipal Solid Waste (MSW) to augment the cement kiln's heat requirements. The feasibility of deploying a sCO_2 power cycle was determined to recover waste heat from different extraction points. Current assessment indicates opportunities for a Demo plant to extract 700 kWe (Turbine power output) while minimally disturbing plant operations. The Demo is expected to provide data for a larger, 8MWe (net) sCO_2-derived power at higher turbine inlet temperatures and with potentially increased MSW use. Deployment of the larger sCO_2 system could lead to partially or fully replacing the second coal boiler, leading to further "greening" of the plant with a potentially attractive pay-back period. Related modeling and design considerations are described.

INTRODUCTION
Emissions of carbon dioxide, a green-house gas (GHG) pollutant from thermally intensive manufacturing processes (e.g., cement, steel, and glass) arise from use of fossil fuel for the required high-temperature heat (e.g., up to 1650 °C in cement kiln operations) as well use of fossil fuel to generate secure and reliable electric power for the plant's operations from within the plant boundary. With respect to cement, reduction of the CO_2 emissions to achieve "green" production would therefore require multiple approaches to provide the required heat. One approach, for example, envisions replacing heat with combustion of green hydrogen instead of coal to reduce/eliminate the emissions, although such a principle remains to be tested [1]. Emissions reduction may be also achieved through use of renewables for the in-house power, but these would either require storage or supplementary fossil fuel use because of their intermittent availability.

Options exist for improving efficiency (and thus to further reduce emissions) in cement plants by recovering the relatively high-temperature enthalpy from the waste heat arising from kiln operations if such enthalpy is converted to power [2]. Exhaust gases from kiln operations can reach up to 600 °C. Supercritical Carbon dioxide (sCO_2) power conversion cycle may offer such an improved efficiency [3, 4]. Given the compactness of the sCO_2 turbomachinery, the equipment may also be retrofitted in existing plants [5]. Ref. [6] provides clear, worldwide examples and the extent to which use may be made of such waste heat. According to the same reference, these plants currently operate with traditional steam Rankine cycle power conversion technology. While subsequent literature mentions the potential

* corresponding author(s)

DOI: 10.17185/duepublico/73978

attractiveness of the sCO_2 power conversion for the cement industry [7], a detailed examination of its implementation is now possible in view of the maturing of this power conversion technology. In this paper, we offer, for what we believe to be the first time, a case study for retrofitting sCO_2 power conversion equipment in an existing cement plant. The plant, located in Tamil Nadu state in India, has already pioneered using renewable power to offset some coal use, and uses Municipal Solid Waste (MSW) to augment caloric needs of the kiln. Results of the study supports deploying a low-temperature, smaller scale demo to obtain scale-up data and techno-economics. Additional use of MSW may lead to design and operating conditions with lower CO_2 emissions, replacement of the existing (second) coal boiler and a desired pay-back period for the operator while lowering the landfill burden to neighboring communities, all leading to further "greening" cement production..

PLANT DESCRIPTION

The plant studied is part of the Associated Cement Company (ACC) business in the town of Madukkarai. The cement plant produces 1.18 million tonnes of cement per year. Cement making is an energy intensive process. Also, the cost of energy is a significant factor in the cost of cement, so improving the energy efficiency of a cement plant will dramatically improve its bottom line.

As shown in Figure 1, waste heat from the hot, dust-laden exhaust gases from the cement plant can be tapped from two sources — namely, clinker cooler and preheater. Unlike other cement plants, raw material of ACC Madukkarai plant is in slurry form and hence the complete exhaust gas from Preheater is used to dry the raw material. In this study, exhaust gas from Clinker cooler will be used for the proposed 0.7 MWe turbine power output demo project and Exhaust gas from Pre-heater (of dry-fed cement plant) will be considered for 8 MWe commercial scale-up.

As the ACC Madukkarai plant feeds the kiln in slurry form, the heat requirement is comparatively more to remove the water content comparing with the modern plants. Due to this additional process, the Madukarrai plant utilizes the waste heat for heating the slurry. Despite that as shown in Figure 1, the tertiary air duct and the cooler blowers can be managed for the hot air recovery of the plant and the temperature availability is varying from 500 °C to 201 °C at different tapping points. As this plant is equipped with Geocycle (GFR Co-processing), which uses the municipal waste as a heat source for combustion that reduces the coal requirement of the cement plant, the required additional heat can be tapped from the Geocycle. The proposed 8 MWe commercial scale-up plant can utilize the heat source from Geocycle in addition to the plant heat recovery considered here for the demonstration.

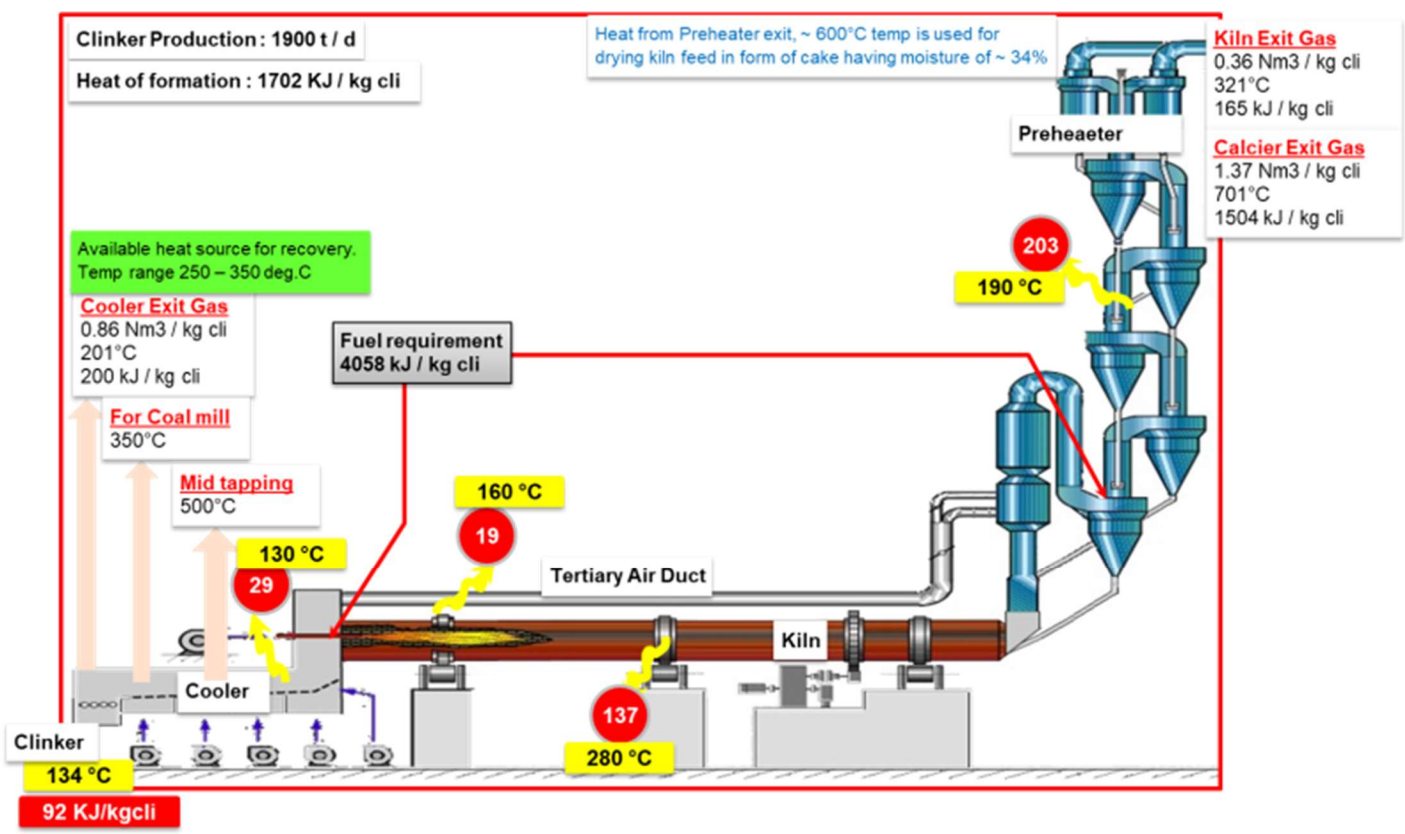

Figure 1.: Cement plant block flow diagram.

SCO_2 SYSTEM DESIGN

The sCO_2 power cycle is a gas-based power cycle with many advantages compared to steam Rankine or helium power cycle. The advantage of the sCO_2 power cycles is in its high efficiency for a given operating temperature [5,8], typically above 450 °C. Another advantage of the sCO_2 power cycles is their compact size compared to steam or helium Brayton cycles [8]. The compressor and the turbine are significantly smaller due to the high operating pressure [5,8]. However, the heat exchange size is significantly large compared to other systems. But a heat exchangers size can be optimized by operating parameters and type selection (cycle layout, design) [9].

Table 1.: Parameters for applications of sCO_2 power cycles [5].

Application	Power	Operation Temperature	Operation Pressure
	[MWe]	[°C]	[MPa]
Nuclear	10-300	350-700	20-35
Fossil fuel (syngas, natural gas, coal)	300-600	550-1500	15-35
Geothermal	10 - 50	100-300	15
Concentrating solar power	10 - 100	500 - 1000	35
Waste heat recovery	1 - 10	200 - 650	15- 35

The sCO_2 power cycle offers many different layouts for several potential applications. The potential applications of the sCO_2 power cycles includes, nuclear power plants [10,11], solar power plants [12,13], geothermal power plants or application to fossil fuel power plants [14, 15] and the waste heat recovery systems [2,16,17,18]. The typical parameters of the sCO_2 power cycle applications are shown in Table 1.

According to Table 1, the range of applications is quite wide [5]. The sCO_2 power cycle can be used for majority of heat sources, which are used in energy conversion systems.

For each application in Table 1, there exist several different cycle layouts. Each cycle layouts have several advantages and disadvantages according to heat source and operating parameters. The cycle layouts can be divided into groups with one or a multi-heat source.

SCO_2WASTE HEAT RECOVERY SYSTEM

According to Table 1, the waste heat recovery systems are in range 1 to 10 MWe, with the operations temperature between 200 to 600 °C. The parameters are in the range of waste heat source which can be found in a cement plant [6].

In this paper the effort is focused on the ACC Madukkarai plant. As previously mentioned, Figure 1 shows the block flow diagram for the plant with several potential heat sources and with different temperature ranges. It can be seen that this plant has three potential heat sources with different temperature levels. Table 2 shows a list of the potential heat source for the cement plant.

Table 2.: Heat source for WHR.

Cooler exit gas	201	°C
Coal mill	250 - 350	
Preheater	600	

According to Figure 1 and Table 2, the system for waste heat recovery can be operated at different heating levels (*The potential heat sources range from 200 to 600 °C*.), which has an effect on the net power and cycle efficiency.

The sCO_2 waste heat recovery system layout can be designed for one or multi-heat source units, according to Table 2. The potential sCO_2 power systems layouts can be the following: [19,20]

- One heat source:
  - Simple Brayton sCO_2 cycle
  - Re-compression cycle
  - Pre-compression cycle
  - Split expansion cycle
- Multi-heat sources:
  - Dual Heater cycle
  - Dual Expansion cycle
  - Cascade
  - Kimzey cycle

Each cycle layout consists of a compressor (C) for isentropic compression, a turbine (T) for isentropic expansion, a cooler (CH), a heat source (H) and recuperative heat exchanger (RH, LHR and HTR), which is used for heat regeneration (improving the cycle efficiency). However, in this research, focus is on commercially available sCO_2 waste heat units [16,21,22], which is based on the simple Brayton sCO_2 cycle.

SCO_2 DEMO PLANT UNIT

The proposed demo plant unit is planned for the ACC Madukkarai plant with for the parameters shown in Table 2.

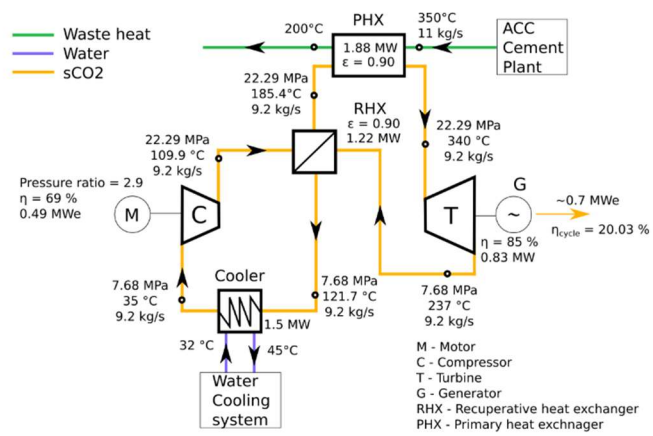

Figure 2.: sCO_2 block flow diagram of the proposed demo plant unit.

The design of the sCO_2 waste heat recovery system for the cement plant application is the simple Brayton cycle layout, which consists of a primary heat exchanger (PHX), Cooler (water or air, according to localization and cooling availability), recuperative heat exchanger (RHX), compressor (C) and turbine (T), as shown in Figure 2.

Accordingly, the system design utilizes input parameters from ACC Madukkarai (Table 2).

The heat source for the sCO_2 demo plant unit is from Clinker cooler (cooler exit gas with mid tapping) with outlet temperature 350 °C. The sCO_2 demo plant unit is designed as a compact system to provide data that can utilized to design the larger, commercial units with 8 MWe of net power output.

For this reason, the following parameters and design of the components were considered for the calculation.

The cooling system is designed as a water-cooling system with an inlet temperature of 32 °C. The turbine is not connected with the compressor on a common shaft. The compressor is driven by an electrical motor, as shown in Figure 2.

The proposed primary heat exchanger (PHX) has a vertical construction, which occupies very little floor space. Also, the vertical PHX requires only a single dust collection point and economical design. The reliable high temperature resisting guillotine dampers are installed in the inlet and bypass ducts so as to make it possible to isolate the PHX for maintenance without requiring production shutdown.

The recuperative heat exchanger (RHX) and cooler are designed as Printed Circuit Heat Exchangers (PCHE) with zigzag and semi-circular channels [23] is being considered.

The pressure ratio is 2.9 and the compressor outlet pressure is 22.29 MPa, according to commercial sCO_2 waste heat recovery units described in the literature [21]. The boundary parameters for all calculations are as shown in Table 3.

Table 3.: Boundary parameters

Compressor inlet temperature	35	°C
Turbine efficiency	85	%
Compressor efficiency	69	
Recuperator effectiveness	90	

The pressure drops are not considered in the calculation for all cases. When pressure losses are considered, the resulting efficiency and net power will show lower values. However, the difference between the values will not be large (because, the maximal pressure drops will be between 1 - 2 %) [24], according to pressure drops calculated from detail design of the heat exchangers.

The system in Figure 2 was designed for the turbine power output 700 kWe, which is 835 kW, if the generator efficiency is 96 %, clutch efficiency is 95 % and gearbox efficiency is 93 %. The required compressor power is 460 kW (490 kWe, for motor and clutch efficiency 95 %), which is generated with an electric motor, according to Figure 2. The mechanical losses are considered to be 1 %. The resulting parameters of the sCO_2 demo plant are shown in Table 4.

Table 4.: sCO_2 demo plant unit parameters

Flow rate	9.2	kg/s
Cycle efficiency	20.03	%
Compressor mechanical power	0.46	MW
Added heat	1.88	
Removed heat	1.5	
Regenerative heat	1.22	
Turbine power output	0.7	MWe

According to Table 4, the required heat input from the heat source is 1.88 MWth with the sCO_2 flow rate of 9.2 kg/s. The cooling power is 1.5 MWth, this power must be removed from the system and water outlet temperature can be maximal 45 °C.

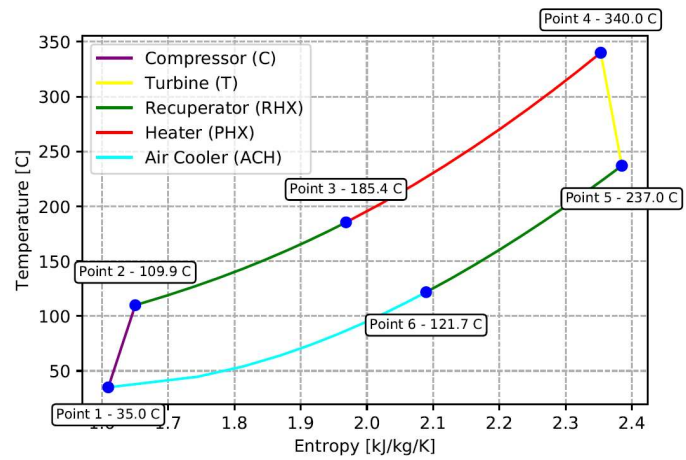

Figure 3.: T-S diagram of the sCO_2 demo plant unit

The T-S diagram for the sCO_2 demo plant unit is shown in Figure 3. According to results in Table 4 and T-S diagram in Figure 3, it is obvious that the sCO_2 plant units based on the operating parameters selected for the demo unit as such are not economically attractive for their commercial potential. However, the sCO_2 demo unit is a practical design, the results from which the design and optimization of the commercial scale sCO_2 waste heat power system with the net power up to 8 MWe may be implemented with the potential heat sources ranging from 250 to 600 °C, as noted in Table 2. These aspects are further described below.

COMPARISON OF DEMO AND COMMERCIAL UNITS

As was mentioned above, the sCO_2 demo plant unit was designed for the demonstration of the waste heat recovery system in the cement plant. In the case of the demo unit, to reduce the design complexity, the following points are considered:

1. Electrical motor driven compressor: To simplify turbo-machinery designs, a 0.7 MWe generator will be driven by sCO_2 turbine and sCO_2 compressor will be driven by an electrical motor. However, 8 MWe system will have sCO_2 turbine with a common shaft to drive both generator and compressor. This will have effect on the

turbine and compressor efficiency. However, for the calculation presented in this paper, the turbine and compressor efficiency with the mechanical losses are same as for 0.7 MWe demo plant unit. In reality, the commercial 8MWe system will have better component efficiencies, and hence better overall performance than what is projected here.

2. Water cooled heat exchanger: For the demo project, heat rejection from the system will be designed with water cooled heat exchanger, in order to simplify the design. The commercial (8 MWe) system is planned to be designed with an air-cooled heat exchanger.

Figure 4 shows the commercial version of sCO_2 waste heat recovery system for the cement plant with same parameters as sCO_2 demo unit, except flow rate and turbine inlet temperature (TIT), and 8 MWe net power. The results for this system are shown in Table 5 and T-S diagram is shown in Figure 5.

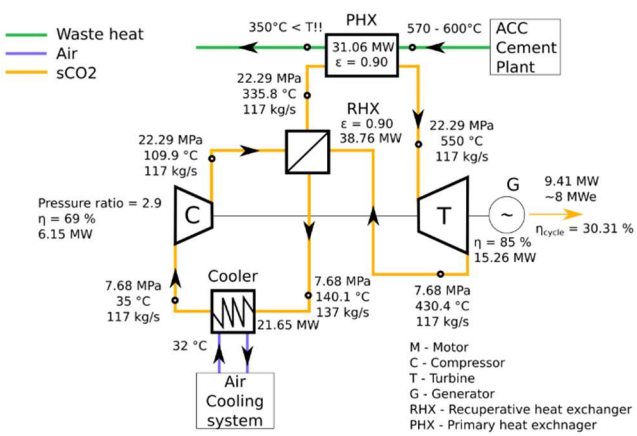

Figure 4.: sCO_2 block flow diagram of the 8 MWe waste heat recovery system with TIT 550 °C.

According to Figures 4 and 5 and Table 5, it is obvious that the simple sCO_2 Brayton cycle can be scaled up from the sCO_2 demo unit to commercial units in the same configuration with the two differences noted earlier.

Table 5.: 8 MWe waste heat recovery system with TIT 550 °C

Flow rate	117	kg/s
Cycle efficiency	30.31	%
Turbine mechanical power	15.29	MW
Compressor mechanical power	6.15	
Added heat	31.06	
Removed heat	21.65	
Reg heat	38.76	
Net power	8	MWe

RESULTS

The T-S and associated calculations were performed using inhouse sCO2WHR code. The code was written in the Python programming language. The Python is an open-source language for programming. The source of gas properties used was NIST Reference Fluid Thermodynamic and Transport Properties database, Version 9.1. [25] and CoolProp [26]. The CoolProp is the open-Source Thermo-physical Property Library.

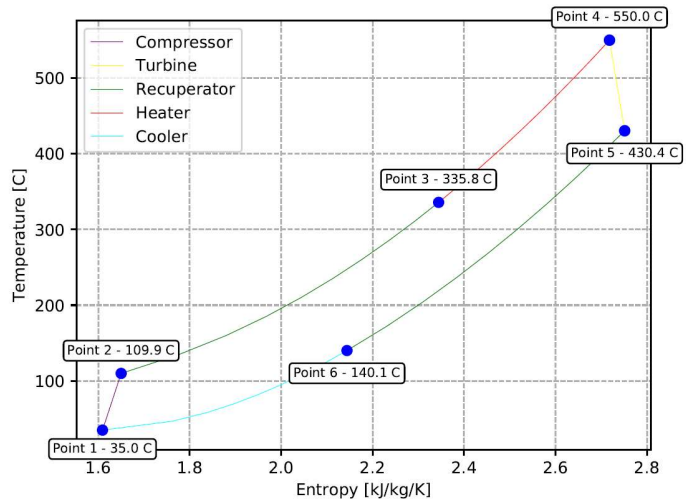

Figure 5.: T-S diagram of the 8 MWe waste hear recovery system with TIT 550 °C.

The parameters of the sCO_2 demo unit do not reach optimal values for the potential commercial application from a techno-economic point of view. The sCO_2 demo plant unit must be optimized and designed for different operating parameters, so that maximum possible net power can be produced from all available waste heat sources in the plant.

One of the ways to increase generated net power is to increase the turbine inlet temperature. With this increase, turbine output power increases. The turbine output power is defined according to Equation 1.

$$P_{tur} = m(h_{in} - h_{out\_real}) \quad (1)$$

Here h_{in} is specific enthalpy for turbine inletand h_{out_real} is specific enthalpy for turbine outlet under real operation with losses. The turbine efficiency is defined as:

$$\eta_t = \frac{h_{in} - h_{out\_real}}{h_{in} - h_{out\_ideal}} \quad (2)$$

where h_{out_ideal} is specific enthalpy for turbine outlet under ideal operation without any losses. The compressor efficiency is calculated according to an equation similar to Equation 2. Figure 5 shows the dependence of the net power and cycle efficiency on the TIT for the simple Brayton cycle layout. The results in Figure 5 are for the turbine inlet pressure 22.29 MPa and mass flow rate 9.2 kg/s. The black vertical line in Figure 5 correspond to the sCO_2 demo unit parameters.

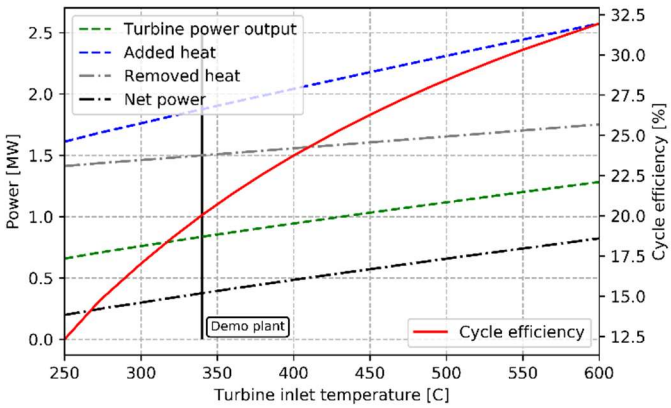

Figure 5.: Effect of the different TIT (mass flow rate = 9.2 kg/s).

The cycle efficiency is defined according to Equation 3, where P_{net} is net power generated from the system and Q_{in} is total the heat input. P_{tur} is turbine output power and P_c is compressor input power.

$$\eta_{th} = \frac{P_{net}}{Q_{in}} = \frac{P_{tur} - P_c}{Q_{in}} \qquad (3)$$

The Q_{in} and Q_{out} (total heat input and rejected heat, respectively) are defined according to Equation 4, where $\dot{m}$ is mass flow rate and h is specific enthalpy on inlet/outlet to the heat or cooler.

$$Q_{in} = \dot{m}(h_{out} - h_{in}), \quad Q_{out} = \dot{m}(h_{in} - h_{out}) \quad (4)$$

The tapping temperature ranges from 200 to 600 °C (Table 2) is possible in the cement plant and can be utilized for a power plant without affecting the cement manufacturing process. The sCO_2 demo unit is aimed to produce 700 kWe for technology demonstration at affordably low capital and operating costs. Figure 5 explains the system characteristics according to the optimization model for the range of temperatures, where the turbine inlet temperature variation is considered from 250 °C to 600 °C. If the turbine inlet temperature is low, the system efficiency is considerably low due to the operational inefficiencies. The sCO_2 demo unit is planned to operate at 340 °C and the corresponding turbine power output is around 0.8 MWth. The cycle efficiency is 20.03%.

On the other hand, if the turbine inlet temperature is for example 550 °C, the corresponding turbine power output is around 1.2 MWth and can attain a cycle efficiency of around 30%. The compressor power is the same for all turbine inlet temperature in the considered range. The remarkable improvement is possible with the higher turbine inlet temperature. As the tapping provision at higher temperatures is not available in the ACC Madukarrai plant, the sCO_2 demo plant turbine inlet temperature is fixed as 340 °C.

The turbine inlet temperature at 340 °C was considered because the objective is to demonstrate the waste heat recovery process on demo plant unit with the readily available heat source, which has temperature around 350 °C.

The sCO_2 demo plant operation will provide insight for the actual size plant which has the potential of 8 MWe and above. The scaling up to 8 MWe sCO_2 waste heat recovery system is shown in Figure 6.

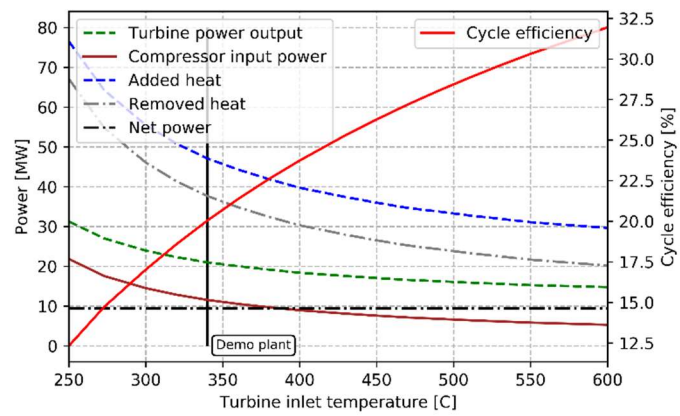

Figure 6.: Effect of the different TIT on the 9.44 MWth (8 MWe) sCO_2 system.

The results in Figure 6 are for the turbine inlet pressure 22.29 MPa and the black vertical line in Figure 6 is shown the sCO_2 demo plant unit parameters. Figure 6 explains the system characteristic for the fixed net power output of 9.44 MWth. As the temperature increases, the heat power required as input decreases which explains the performance improvement at the higher temperatures (red line). The thermal input is lower for the constant output with the rise in temperature from 250 °C to 550 °C. At the same time, the required input heat and compressor power decrease with the increase in the turbine inlet temperature. With the increased turbine inlet temperature, the required input heat is transferred with higher efficiency, and due to higher efficiency, the mass flow rate is reduced. This effect is shown in Figure 7.

According to Equations 1 to 4, is clearly visible that with a decrease in the mass flow rate, the required input, cooling or compressor, and turbine power decrease. These dependencies are shown in Figure 7. However. the net power is dependent on the compressor and turbine power. The compressor power is decreased too and because the compressor is operated near the critical point of the CO_2, the required compressor power is lower. This is one of the biggest advantages of the sCO_2 power cycle.

CONCLUSIONS & RECOMMENDATIONS

Use of supercritical carbon dioxide as the working fluid in a closed, simple, recuperated Brayton cycle has been proposed here to convert a portion of the waste heat from an existing cement factory to electricity. This plant, located in Madukkarai, India has. multiple sources of waste heat available at various temperatures. Based on practical considerations, this study has focused on what is available from clinker cooler at 350 °C for purposes of demonstration and subsequent scale up. The design

complexity for the demo plant was reduced by utilizing electrical motor driven compressor and water-cooled heat exchanger. From the perspective of the design complexity and low heat source temperature, the system shows suboptimal operation parameters as shown in the model calculations.

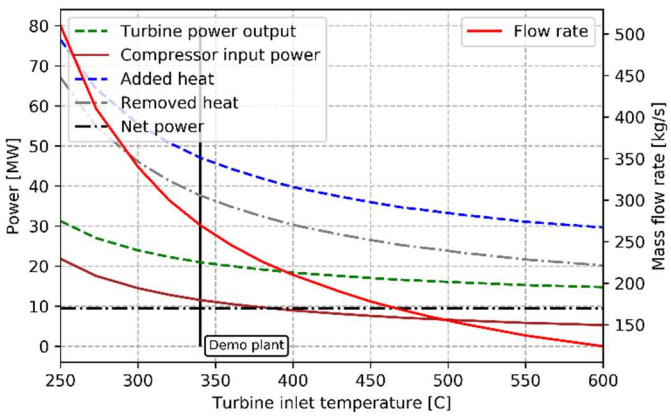

Figure 7.: Effect of the different TIT on the 9.44 MWth (8 MWe) sCO_2 system.

Optimization of cycle parameters, with consideration of integration of waste heat to power cycle, led to a sCO_2 cycle with a pressure ratio of 2.9 and a maximum pressure of 22.29 MPa at the compressor output. With *ad hoc* assumption of reasonable and realizable efficiencies of all relevant components, the cycle optimization could lead to a maximum overall waste-heat-to-electricity efficiency of 30.3% for a net power output of 8 MWe and a turbine inlet temperature of 550 C.

This paper considered one of multiple steps, and perhaps the easiest-to-implement step, in greening of an existing cement plant. Consideration of all other sources of waste heat as well as use of locally-sourced municipal solid waste can increase the exergy-content of the total waste heat at a higher temperature, and can lead to larger net electrical output at a higher overall cycle efficiency. Such an effort is necessary in continued greening of a cement plant. In addition, fossil-based heating source needs to be fully replaced for a fully green operation. If enough solid waste is not available, then use of green hydrogen, obtained through electrolysis of water using green electricity, with collocated storage is necessary. As noted in Ref. [1], however such a principle has not been tested. Meanwhile, considerations such as described in this paper are critical to ensure reduction of CO_2 emissions through improvements in performance using sCO_2 waste heat recovery, especially in existing plants.

This study focused on retrofitting of an existing cement plant in order to make in green. For a completely new design, an overall design optimization that considers both cement production and waste heat recovery in an integrated fashion is necessary, in order to have a very resource-efficient, cement factory.

NOMENCLATURE

η_{th}	Cycle efficiency (%)
h	Enthalpy (kJ/kg)
S	Entropy (kJ/kgK)
P	Power (MWth)
Q	Heat (MW)
m	mass flow rate (kg/s)

ABBREVIATIONS

MSW	Municipal Solid Waste
TIT	Turbine inlet temperature
C	Compressor
T	Turbine
CH	Cooler
H	Heat source
RH, LHR and HTR	Recuperative heat exchanger
PHX	Primary heat exchanger
G	Generator
M	Motor
PCHE	Printed Circuit Heat Exchangers
WHR	Waste Heat Recovery

ACKNOWLEDGEMENTS

The authors would like to thank Prof. Vaclav Dostal from Czech Technical University in Prague for their support and encouragement.

The first author likes to further acknowledge the support from UCF's Preeminent Postdoctoral Program (P3).

The authors would like to thank Mr. Uday Pawar, Mr. Rajkumar Chandran and Mr. Milan Trivedi from ACC Limited Madukkarai plant - India, for their support providing technical data on their existing plant.

The authors also would like to thank Mr. P. U. Gopi and Mr. Bhaskar. T R from Triveni Turbines, Bangalore - India unit for providing their design parameters of sCO2 Turbine.

REFERENCES

[1] Mineral Products Association, Cinar Ltd, VDZ gGmbH (2019). "*Options for switching UK cement production sites to near zero CO_2 emission fuel: Technical and financial feasibility. Feasibility Study for the Department for Business Energy and Industrial Strategy*"; TRN 1674/10/2018

[2] A. Amiri and M. R. Vaseghi, *"Waste Heat Recovery Power Generation Systems for Cement Production Process,"* in IEEE Transactions on Industry Applications, vol. 51, no. 1, pp. 13-19, Jan.-Feb. 2015, doi: 10.1109/TIA.2014.2347196.

[3] Khadse A, Blanchette L, Kapat J, Vasu S, Hossain J, Donazzolo A., *"Optimization of Supercritical CO_2 Brayton Cycle for Simple Cycle Gas Turbines Exhaust Heat Recovery Using Genetic Algorithm"*. Journal of Energy Resources Technology. 2018 Jul 1;140(7).

[4] Wright S.A., Davidson C.S., Scammell W. O., *"Thermo-Economic Analysis of Four S-CO_2 Waste Heat Recovery Power Systems"*., 2016: The 5th International Symposium-Supercritical CO2 Power Cycle.

[5] Brun K., Friedman P., Dennis R., *"Fundamentals and Applications of Supercritical Carbon Dioxide (S-CO_2) Based Power Cycles"*., 2016: Elsevier, ISBN: 978-0-08-100804-1.

[6] International Finance Corporation: IFC World Bank. *"Waste Heat Recovery for the Cement Sector: Market and Supplier Analysis"*. (2014), Report number 46211.

[7] Amiri, A, and Vaseghi, M.R., *"Waste Heat Recovery Power Generation Systems for Cement Production Process"* IEEE Transactions on Industry Applications. VOL. 51, NO. 1, 13, 2015 Jan-Feb.

[8] Angelino G., *"Carbon Dioxide Condensation Cycles for Power Production"*., 1968: ASME Paper No. 68-GT-23.

[9] Vesely L., Dostal V., Bartos O., Novotny V.,"*Pinch Point Analysis of Heat Exchangers for Supercritical Carbon Dioxide with Gaseous Admixtures in CCS Systems"*., 2016: Energy Procedia, Volume 86, Pages 489-499, ISSN: 1876-6102.

[10] V. Dostal, M. J. Driscoll, and P. Hejzlar, *"A supercritical carbon dioxide cycle for next generation nuclear reactors."* Massachusetts Institute of Technology, Department of Nuclear Engineering …, 2004.

[11] Vesely L, Dostal V, Entler S., *"Study of the cooling systems with S-CO_2 for the DEMO fusion power reactor"*. Fusion Engineering and Design. 2017 Nov 1;124:244-7.https://doi.org/10.1016/j.fusengdes.2017.05.029

[12] Zhiwen M, Turchi C.S., *"Advanced Supercritical Carbon Dioxide Power Cycle Configurations for Use in Concentrating Solar Power Systems"*., 2011: NREL/CP-5500-50787.

[13] Iverson B.D., Conboy T.M., Pasch J.J., Kruizenga A.M., *"Supercritical CO_2 Brayton Cycles for Solar-thermal Energy"*., 2013: Elsevier Ltd. 1-s2.0-S0306261913005278-main.

[14] Allam R.J., Fetvedt J.E., Forrest B.A., Freed D.A., *"The Oxy-Fuel, Supercritical CO_2Allam Cycle: New Cycle Developments to Produce Even Lower-Cost Electricity From Fossil Fuels Without Atmospheric Emissions"*., 2014: ASME Turbo Expo 2014: Turbine Technical Conference and Exposition, Volume 3B: Oil and Gas Applications; ISBN: 978-0-7918-4566-0, doi:10.1115/GT2014-26952.

[15] Maxson, Andrew, Miller, Jason, Buckmaster, David, Thome, Ted, Sakadjian, Bartev, Chamberland, Ray, Hong, Kiho, and Hogg, Dougal. High-Efficiency Thermal Integration of Closed Supercritical CO2 Brayton Power Cycles with Oxy-Fired Heaters (Final Report). United States: N. p., 2018. Web.

[16] Kacludis A., Lyons S., Nadav D., Zdankiewicz E., "*Waste Heat to Power (WH2P) Applications Using a Supercritical CO_2 - Based Power Cycle"*., 2012: Echogen Power Systems LLC: Presented at Power-Gen International 2012.

[17] Marchionni, M., Bianchi, G. Tassou, S.A., *"Review of supercritical carbon dioxide (sCO_2) technologies for high-grade waste heat to power conversion"*., SN Appl. Sci. 2, 611 (2020). https://doi.org/10.1007/s42452-020-2116-6.

[18] Khadse A, Blanchette L, Kapat J, Vasu S, Hossain J, Donazzolo A., *"Optimization of Supercritical CO_2 Brayton Cycle for Simple Cycle Gas Turbines Exhaust Heat Recovery Using Genetic Algorithm"*. Journal of Energy Resources Technology. 2018 Jul 1;140(7).

[19] Kimzey G., *"Development of a Brayton Bottoming Cycle Using Supercritical Carbon Dioxide as the Working Fluid"*., Electric Power Research Institute Report, Palo Alto (CA), 2012.

[20] Crespi, F., Gavagnin, G., Sánchez, D. and Martínez, G.S., 2017. *"Supercritical carbon dioxide cycles for power generation: A review"*. Applied Energy, 195, pp.152-183.

[21] Held, T.J., 2014, *"September. Initial test results of a megawatt-class supercritical CO_2 heat engine"*., In The 4th International Symposium–Supercritical CO_2 Power Cycles (pp. 9-10).

[22] Held, T.J., Miller, J., Buckmaster, D.J., 2016, March., *"A comparative study of heat rejection systems for sCO_2 power cycles"*., In The 5th International Symposium-Supercritical CO_2 Power Cycles (pp. 28-31).

[23] Ngo T.L., Kato Y., Nikitin K., Ishizukam T., *"Heat Transfer and Pressure Drop Correlations of Microchannel Heat Exchangers with S-shaped and Zigzag Fins for Carbon Dioxide Cycles"*., 2007: Tokyo Institute of Technology, Japan.

[24] Pratt& Whitney Rocketdyne Report, *"Turbine Technology Program Phase II: SCO_2 Turbomachinery Configuration and Control Trade Study,"* 2012, Sept. 14, Contract: DE-FE0004002 Subcontract Number: S163-PWR-PPM4002.

[25] Lemmon E.W., Huber M.L., McLinden M.O., *NIST Standard Reference Database 23: Reference Fluid Thermodynamic and Transport Properties-REFPROP*., 2013: Version 9.1.

[26] Bell I.H., Wronski J., Quoilin S., Lemort V., *Pure and Pseudo-pure Fluid Thermophysical Property Evaluation and the Open-Source Thermophysical Property Library CoolProp*., Industrial & Engineering Chemistry Research, volume = 53, 2014, doi10.1021/ie4033999.

ANNEX A - DEMO PLANT UNIT EQUIPMENT LAYOUT

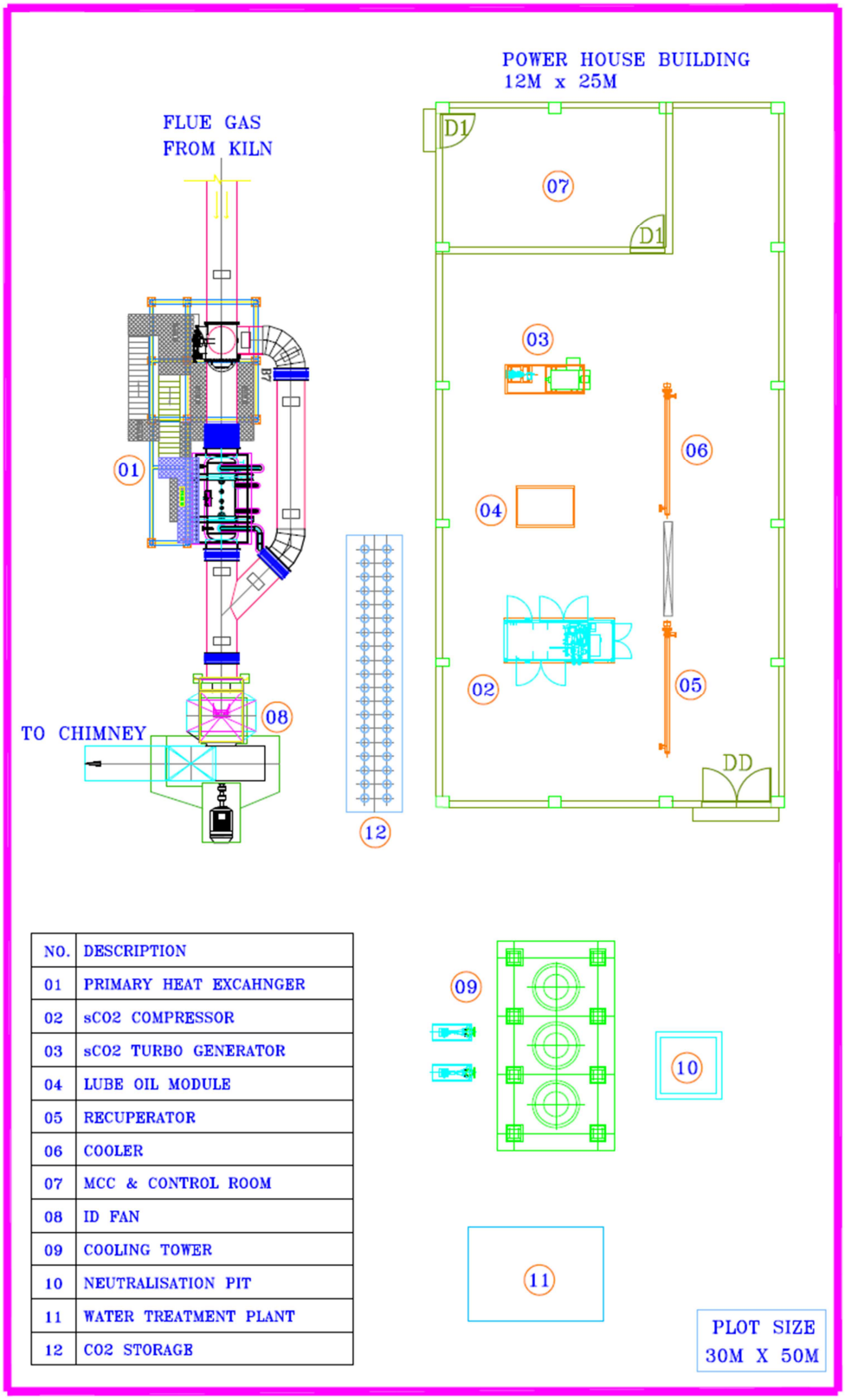

NO.	DESCRIPTION
01	PRIMARY HEAT EXCAHNGER
02	sCO2 COMPRESSOR
03	sCO2 TURBO GENERATOR
04	LUBE OIL MODULE
05	RECUPERATOR
06	COOLER
07	MCC & CONTROL ROOM
08	ID FAN
09	COOLING TOWER
10	NEUTRALISATION PIT
11	WATER TREATMENT PLANT
12	CO2 STORAGE

Published in: 4th European sCO2 Conference for Energy Systems, 2021

DOI: 10.17185/duepublico/73978
URN: urn:nbn:de:hbz:464-20210330-122024-9