The 4th European sCO_2 Conference for Energy Systems
March 23-24, 2021, Online Conference

2021-sCO2.eu-117

EXPERIENCES FROM SUPERCRITICAL CO_2 APPLICATIONS IN REFRIGERATION AND AIR CONDITIONING SYSTEMS

Christian Doerffel*
Technische Universität Dresden
Dresden, Germany
Email: christian.doerffel@tu-dresden.de

Christiane Thomas
Technische Universität Dresden
Dresden, Germany

Ullrich Hesse
Technische Universität Dresden
Dresden, Germany

ABSTRACT

Carbon dioxide (CO_2) is a working fluid, which is suitable for various applications. Excellent heat transfer properties, especially in the supercritical area, make it attractive for thermal systems. As it is an environmentally friendly and non-flammable fluid, it is used in larger stationary systems e.g. in supermarket refrigeration systems as well as in small cycles, e.g. for mobile air conditioning (A/C) systems. There is no risk of pollution or major environmental damage due to leakage or accidental release of fluid. In addition to power cycles, CO_2 is suitable for cooling circuits for both subcritical (liquid-gas phase change) and transcritical applications. The latter includes supercritical heat rejection and subcritical heat absorption. Therefore, CO_2 refrigeration systems and their components, e.g. compressors, have special design requirements. They need to be specially adapted to the fluid properties such as pressures above 10 MPa and pressure differences up to 8 MPa. The efficiencies of refrigeration systems must be competitive to those of conventional refrigerants. This requires advanced system designs, which will be presented. Finally, possible synergies between CO_2 power systems and CO_2 refrigeration and heat pump systems will be discussed.

INTRODUCTION

Carbon dioxide was already one of the first working fluids used for refrigeration cycles. It appeared in patents in the 1850s and 1860s, and in 1869, Thaddeus Lowe constructed an ice making machine. In 1882 Carl von Linde designed a refrigeration machine using carbon dioxide in Germany. In the 1890s the manufacturing of CO_2 piston compressors started. This led to a widespread application of CO_2 in refrigeration and air conditioning, promoted by the fact that CO_2 is a safe, non-toxic and non-flammable refrigerant [1].

Especially ships were equipped with carbon dioxide cooling systems from the 1890s to the 1940s. Stationary CO_2 systems for brine cooling were manufactured, which were applied in cold storage rooms and refrigerators for food markets, restaurants, hotel kitchens, hospitals, etc.

The compressors used were slow-running (up to 325 rpm, usually around or below 100 rpm [1][2]) open type reciprocating piston compressors in either vertical or horizontal arrangements. The design followed the steam engines of that time, as the compressors were constructed with double-acting pistons and stuffing boxes for shaft sealing [1].

At this time, the cycles were operating mostly subcritically, which led to the necessity of using cooling towers for the heat rejection at high ambient temperatures [1][2].

In the 1940s and the following decades, CO_2 refrigeration machines disappeared and were replaced by systems using halogenated hydrocarbons (CFCs). In the late 1980s and early 1990s, the Norwegian scientist Gustav Lorentzen reintroduced CO_2 by proposing the use of CO_2 in transcritical cycles [3][4]. This led to a dynamic development, with these cycles being applied to heat pumps [5], mobile air conditioning systems [6][7][8] and stationary refrigeration systems [9].

Today, there is large and growing number of transcritically operating CO_2 refrigeration systems and a lot of research in this field. Furthermore, both the “warm” and the “cold” heat flow of these systems is used, whereas there currently is no coupling to electricity generation, which is contemplated by this contribution.

TRANSCRITICAL SYSTEMS

The essential points of the new interest in CO_2 as a working fluid were, on the one hand, its environmentally friendly properties (ODP = 0, GWP = 1) and, on the other hand, the possibilities offered by electronic control technologies, which

* corresponding author(s)

DOI: 10.17185/duepublico/73955

allowed controlling the high pressure in the supercritical area. This is crucial for efficient operation of the plant. The coefficient of performance (COP) as a metric of the energy efficiency of mechanically driven cooling cycles is defined as follows:

$$COP = \frac{\dot{Q}_{absorbed}}{P_{compressor}} = \frac{\dot{Q}_0}{P_{electric}}$$

Whereas for the corresponding heat pump cycles:

$$COP = \frac{\dot{Q}_{rejected}}{P_{compressor}} = \frac{\dot{Q}_{heating}}{P_{electric}}$$

In figure 1, transcritical CO_2 cycles with the same gas cooler outlet and evaporation temperatures are shown in a lg(p)-h-diagram. The heat rejection pressure or gas cooler outlet pressure p_{GC} of the displayed cycles varies from 8 MPa (80 bar) to 11 MPa (110 bar). The difference of the specific enthalpy 4-1 and 2-3 is the amount of absorbed (q_0) and dissipated (q_{GC}) heat. The difference of the specific enthalpy h between the points 1 and 2 indicates the specific compressor work $w_{compressor}$. By means of an electronic expansion valve, the heat rejection pressure can be adjusted. It is easy to see that the variation of the gas cooler pressure (p_{GC}) in the range 80 bar to 100 bar (8 MPa to 10 MPa) results in large differences in the absorbed and dissipated heat, while the power consumption changes only slightly.

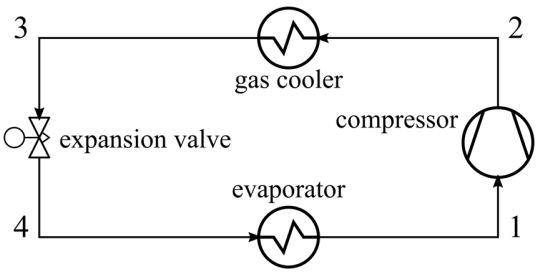

Figure 1: Basic cycle diagram with compressor, gas cooler, expansion valve and evaporator

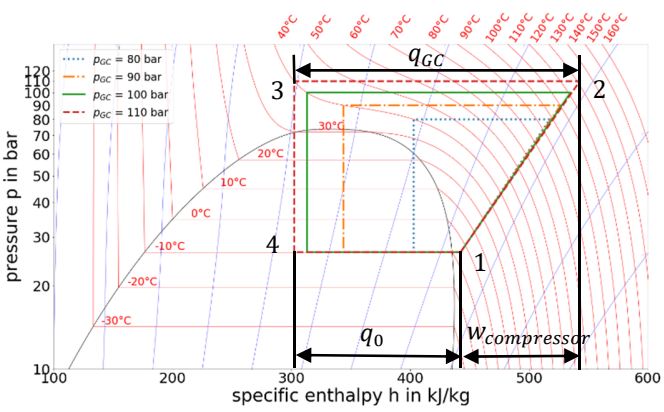

Figure 2: Lg(p)-h-diagram of CO_2 with transcritical cycles operating at different heat rejection pressure levels

For a given gas cooler outlet temperature t_3, the dissipated heat changes less with increasing the pressure above a certain point, resulting in an optimum gas cooler pressure p_{GC}.

As an additional result of using a transcritical CO_2 cycle instead of subcritical cycles, a different concept is required for receivers or accumulators. In the supercritical region there is no phase separation and therefore it is not possible to have a high-pressure receiver with a varying liquid level after the condenser. Therefore, Lorentzen proposed different cycle arrangements, as shown in figures 2 to 4 [3].

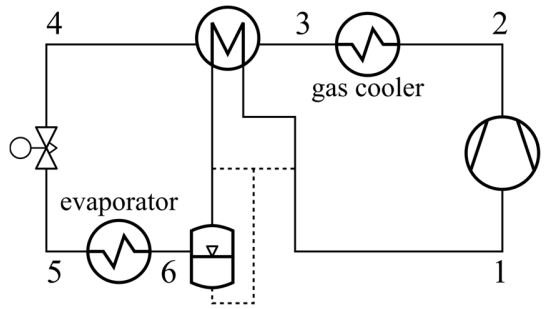

Figure 3: Cycle with accumulator after evaporator [3]

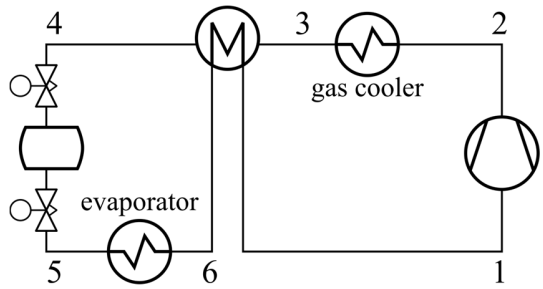

Figure 4: Cycle with intermediate pressure receiver in flow [3]

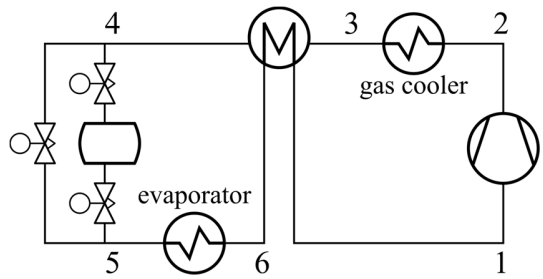

Figure 5: Cycle with receiver in branch flow [3]

In figure 3, a receiver/accumulator is used downstream of the evaporator and separates liquid from the gaseous phase. The gaseous phase enters an internal heat exchanger, ensuring that the fluid is superheated before entering the compressor. The liquid phase in the accumulator consists mainly of liquid CO_2 and oil for the lubrication of the compressor. In order to ensure the lubrication of the compressor, it is necessary that a small amount of this liquid phase is returned to the compressor, which can be added before or after the internal heat exchanger by an additional flow control device like an orifice.Figure 4 shows a

cycle using an intermediate pressure receiver after the internal heat exchanger, where the first valve between the internal heat exchanger and the receiver controls the high pressure. A second valve between the receiver and the evaporator controls the superheating after the evaporator. In figure 5, an additional valve is added to the cycle to ensure a minimum flow of refrigerant through the evaporator.

The cycle depicted in figure 3 is most commonly used for mobile applications due to its simple design and easy control. It is used for railway [8] and for automotive [6][7] air conditioning and heating. Especially when operating in heat pump mode, the efficiency of the system is better than in systems using other common refrigerants. Therefore, circuits for mobile application are often equipped with 3-way-valves or 4-way-valves for switching from cooling mode to heating mode. The compressors used for automotive A/C are usually either axial piston compressors driven by the car engine via a belt and clutch [6][7] or electrically driven scroll compressors using a frequency inverter.

Air conditioning and heat pump systems for trains have special requirements, as both the cooling and heating capacity can be on the magnitude of stationary systems, but the packaging requirements are strict due to the mobile application. Furthermore, the electrical power supply is of low quality due to high voltage peaks or voltage drops, which makes the use of frequency inverters uneconomical. Therefore, capacity control is performed by cylinder unloading, high-pressure variation and compressor cycling.

Typical compressors used for both railway and stationary systems are reciprocating piston compressors and rolling piston compressors, usually lubricated with POE oils or sometimes with PAG oils. Especially POE oils have excellent miscibility properties with CO_2, which makes them suitable for a wide variety of systems and applications, including widely distributed pipe networks. Additionally, POE oils are thermally stable, which is necessary for the high discharge temperatures of transcritically operating CO_2 cycles. PAG oils have a miscibility gap, which makes them suitable only for systems with short pipes, such as chiller units [10]. The miscibility gap could otherwise lead to oil entrapment in the cycle and missing oil in the compressor. This would harm the compressor in terms of wear, particularly in the bearings. The mentioned compressor types are suitable due to typical CO_2 mass flows in the range of $10^{-2}\ kg/s$ to $10^{1}\ kg/s$, high pressure differences of up to $10\ MPa$, and the extremely low viscosities of CO_2 in the range of $10^{-5}\ Pa\ s$ to $10^{-4}\ Pa\ s$. Due to their internal sealing concept, reciprocating and rolling piston compressors can handle the resulting high pressure differences and high forces very well. The area in which the point of state of the compressor suction gas is usually located is depicted in figure 6. Additionally, the typical operational field of the gas cooler or condenser is shown. These limits are derived from commercially available products of the refrigeration industry and show that there is lack of supercritically operating compressors and components that can withstand temperatures above 150 °C. This temperature limit results from the fact that the compressor oil decomposes at high temperatures. Therefore, these are drawbacks for the development of high temperature heat pumps using CO_2 at a required temperature level above this limit. Due to problems mentioned above, the behavior of oils and oil-refrigerant mixtures is one subject of research at the TU Dresden.

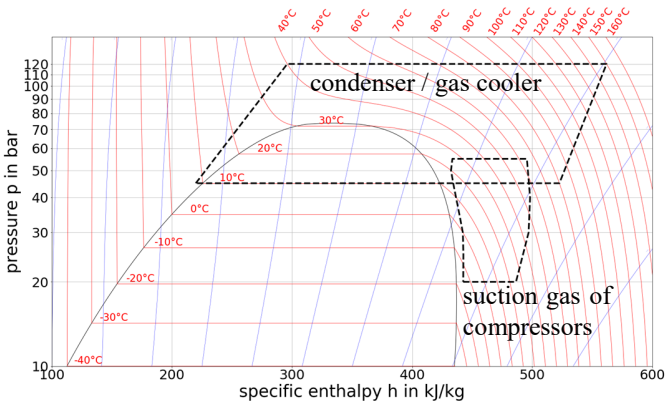

Figure 6: typical fields of application of compressors and heat exchangers for transcritical CO_2 cycles

The component arrangement of stationary systems differs slightly from that of the mobile systems. Usually they are set up with an intermediate pressure receiver, similar to the circuit shown in figure 4. In contrast, an additional valve is added to control the intermediate pressure in the receiver, as shown in figure 7. As a result, this receiver does not need to be designed for supercritical conditions and can therefore be less expensive. Furthermore, the amount of the so-called "flash gas" in the evaporator is reduced, which means that the vapor quality after the throttling valve is decreased. This results in better heat transfer properties in the evaporator. An internal heat exchanger can improve the cycle efficiency, but is not necessary. The design pressure of the evaporators is usually far below the critical pressure for cost reasons. During compressor stand-still, an unacceptable pressure rise would occur inside the receiver due to heat transfer into the receiver and evaporating carbon dioxide. To avoid this, a small chiller unit is installed, which keeps the pressure within an acceptable range by condensing the CO_2 inside the receiver at a temperature below ambient temperature.

As an enhancement, so called parallel compressors can be used for compressing the flash gas to high pressure instead of throttling it, as can be seen in figure 8. This leads to energy savings of about 10% to 20%, depending on chosen pressure levels [11][12].

Additionally, there are various approaches to recover the expansion work, as this could theoretically save up to 30% of energy consumption. Due to irreversibilities in compressors and expanders, only about 10% of the total energy consumption can be recovered in real systems. For this application there are approaches using axial flow turbines and asynchronous generators [13] as shown in figure 9.

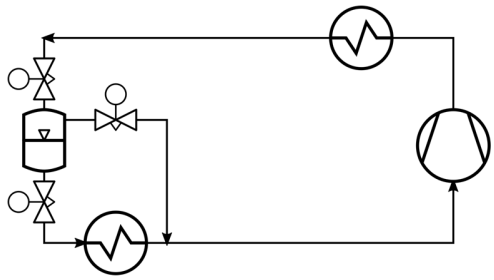

Figure 7: Cycle using an intermediate pressure receiver and a "flash gas bypass", typical circuit of stationary systems

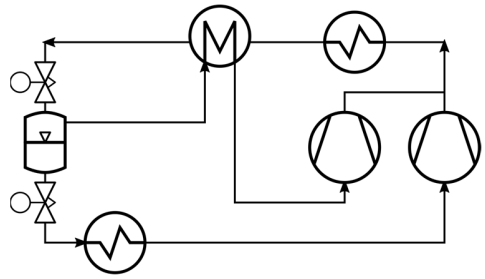

Figure 8: Cycle with intermediate pressure receiver and parallel compression

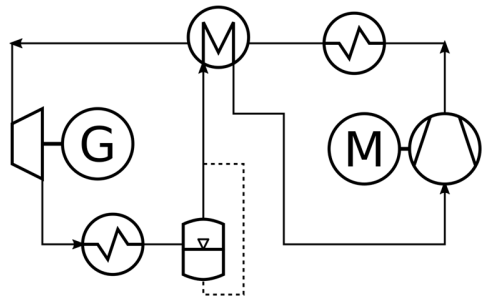

Figure 9: Cycle using an expansion turbine for expansion work recovery

Ejectors are another possibility to recover expansion work, as shown in figure 10 and figure 11. Ejectors, also known as jet pumps, compress a suction flow of low pressure by momentum transfer of an expanding motive flow from high pressure to a common intermediate pressure. Accordingly, the compressor suction port can be connected to the medium pressure receiver as depicted in figure 10. Neither a flash gas bypass valve nor parallel compressors are needed in this configuration. It is also possible to combine the parallel compression cycle with ejectors. This leads to a decreasing main compressor mass flow and increasing parallel compressor mass flow. As the specific work of the parallel compressor is lower than the specific work of the main compressor, the total energy consumption is reduced. Ejectors do not have any moving parts, except for needle-controlled ejectors in which the motive nozzle diameter and thus the motive flow is controlled by a needle. Therefore, ejectors provide a reliable and cost-effective solution for recovery of expansion work. Nevertheless, the control of systems with ejectors is still a challenge.

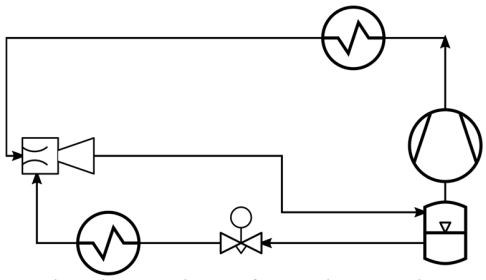

Figure 10: Cycle using an ejector for work expansion recovery

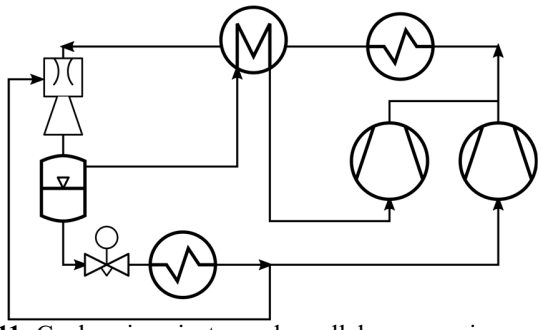

Figure 11: Cycle using ejector and parallel compression

A third possibility to recover expansion work is the use of displacement expansion machines, such as reciprocating type expanders. At the TU Dresden, the development of an expansion-compression-unit for heat pump applications was started in the 1990s. The work gained by the expander was used for a second compression stage after an intercooler as shown in figure 12. It was designed as a free piston machine with expander inlet valves actively controlled by electronics [5].

This machine and the associated circuit were developed for more than 20 years until the current design proved to be a promising solution, also in terms of controllability [14]. The set-up is based on an economizer system, where the expansion work is used to drive the compressor of the subcooler (economizer) cycle, shown in figure 12. The expander-compressor-unit is a slow-running free piston machine and is designed for dry running operation. This cycle can increase the efficiency by about 25% compared to a basic cycle, according to figure 7. In combination with parallel compression, efficiency enhancement up to almost 50% can be achieved with an optimized control system [15][12].

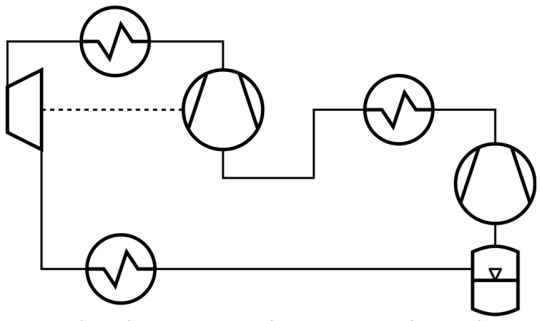

Figure 12: Cycle using an expansion-compression-unit

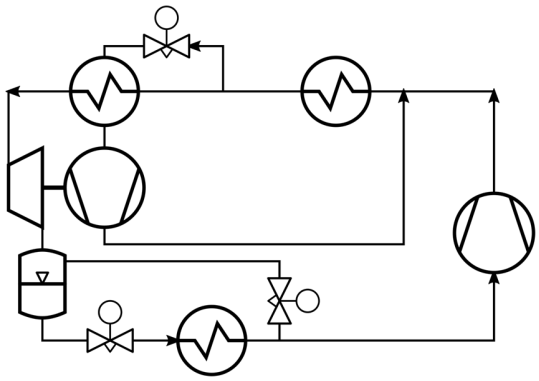

Figure 13: Cycle using an economizer cycle with an expansion-compression-unit

Furthermore, new stationary systems today are often designed for using both the hot and cold side, as the so-called heat recovery or hybrid systems. Some examples of their uses are for hot tap water production and for space heating. These systems use the maximum exergy available from the thermodynamic cycle. For power cycles the corresponding principle is known as combined heat and power (CHP) or cogeneration. The heat can even be used to drive a thermal refrigeration system such as absorption, adsorption or resorption systems, which leads to so-called tri-generation or combined cooling, heat and power generation (CCHP).

Tri-generation-systems, using only CO_2 as a working fluid, and supplying electricity, heating and cooling are subjects of future research. It seems possible to increase the efficiency or capacity of the power cycle as well as the cooling and heat pump cycles.

A simple design proposal can be found in figures 14 to 16. Especially if the heat source for the sCO_2 cycle provides latent heat at a high temperature level, a recuperator should be used as shown in figures 15 and 16. Changing the connection of the recuperator outlet between low pressure and medium pressure results in a different specific work [16], which could be interesting for the variation of the electric power and/or the recovered heat, if the low stage compressor offers sufficient capacity. The advantage of this system is a common cycle for waste heat recovery with power generation and cooling as well as the possibility to use the recovered heat for another thermally driven refrigeration system such as an adsorption chiller.

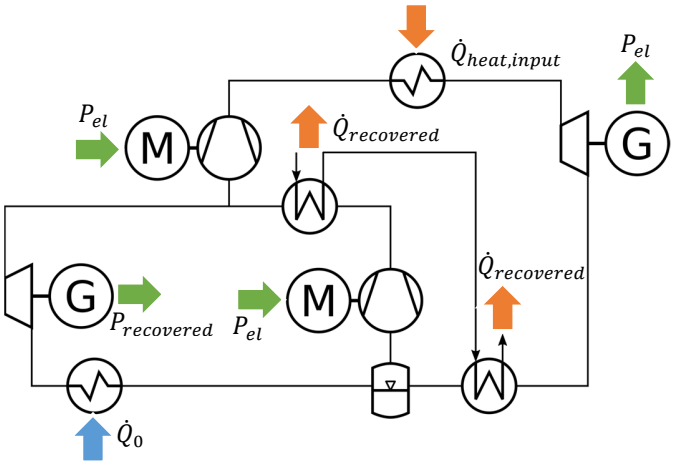

Figure 14: Proposed simple CO_2 tri-generation system using a sensible heat source and high temperature waste heat recovery

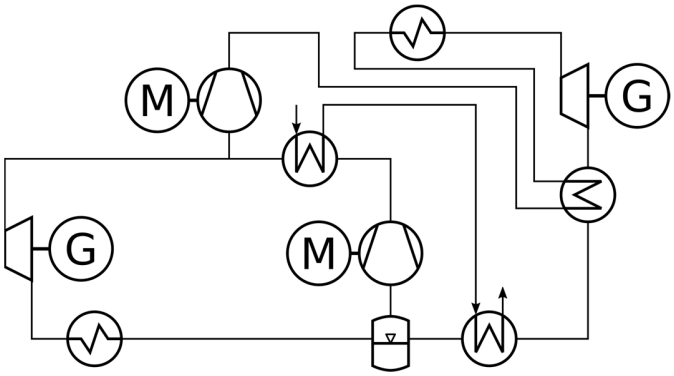

Figure 15: Proposed simple CO_2 tri-generation system using a latent heat source and low temperature waste heat recovery

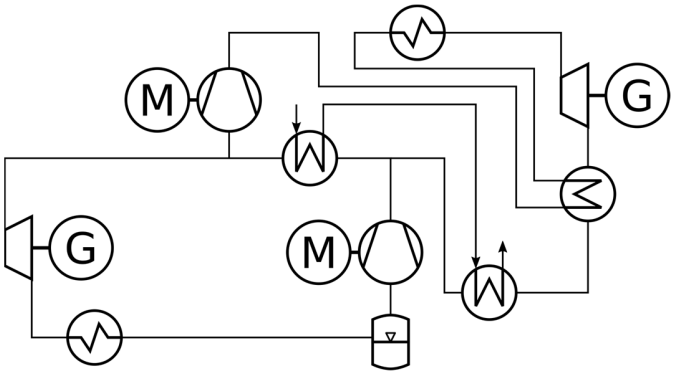

Figure 16: Proposed simple CO_2 tri-generation system using a latent heat source and low temperature waste heat recovery

SUMMARY AND CONCLUSIONS

In this contribution some aspects of technologies and common system designs of CO_2 cooling systems were presented. Both CO_2 power processes and transcritical CO_2 cooling cycles operate at least in parts in the supercritical region. Therefore, both fields face the similar advantages and challenges concerning thermophysical and chemical properties and component design. For example, both cycles need to dissipate their heat against a secondary fluid such as ambient air or water. Therefore, possible synergies are air-fluid and water-fluid heat exchangers for a design pressure between $12\ MPa$ and $16\ MPa$. Currently, gas cooler heat exchangers are generally designed for $12\ MPa$ at $150\ °C$, but there is a demand for heat exchangers that can withstand higher pressure levels, as the applications extend to higher heat dissipation temperatures. Other components such as ejectors, pumps and expansion turbines are used in both sCO_2 power cycles [16] and cooling cycles, so there can be advantageous synergies in component development and manufacturing. The development of high temperature heat pumps using CO_2 could be another promising field of cooperation. Going one step further, integrating a power system with a cooling and heating system to form a so called tri-generation system can lead to maximum system efficiencies and maximum utilization of limited resources.

NOMENCLATURE

COP	Coefficient of performance, efficiency (-)
P	Power (kW)
$\dot{Q}$	Heat flow (kW)
q_0	Specific cooling capacity
p_{GC}	Gas cooler pressure
p_0	evaporation pressure
PAG	polyalkylene glycol oils
POE	polyolester oils

ACKNOWLEDGEMENTS

The authors would like to thank the German Federal Ministry for Economic Affairs and Energy (Bundesministerium für Wirtschaft und Energie), which has financed this work within the project EFFCO2 (funding code: 03ET1541A).

REFERENCES

[1] Bodinus, W. S. (1999). The Rise and Fall of Carbon Dioxide Systems. ASHRAE Journal, Vol. 41, No. 4.
[2] Göttsche-Altona, G. (1907). Die Kältemaschinen. Verlag Johannes Kriebel, Hamburg, Germany.
[3] Lorentzen, G. (1989). Trans-Critical Vapour Compression Cycle Device. WO 90/07683. Norway, Trondheim.
[4] Lorentzen G. (1994). Revival of Carbon Dioxide as a Refrigerant. International Journal of Refrigeration, Vol. 17, No.5, p. 292-301.
[5] Heyl, P., (2000). Untersuchungen transkritischer CO2-Prozesse mit arbeitsleistender Entspannung : Prozessberechnungen, Auslegung und Test einer Expansions-Kompressions-Maschine, Forschungsberichte des Deutschen Kälte- und Klimatechnischen Vereins e.V.; Vol. 62, Stuttgart, Germany.
[6] Hinrichs, J. (2005). Neue CO2-Kompressoren für Kompaktfahrzeuge und Low Cost Systeme. Proceedings of the conference Deutsche Kälte-Klima Tagung 2005, Würzburg, Germany.
[7] Ayar, A., Heckt, R., (2005). R744 Kompressoren – geeignete Verdichter für jede Fahrzeugklasse. Proceedings of the conference Deutsche Kälte-Klima Tagung 2005, Würzburg, Germany.
[8] Schrank, P., Rauch, A., Presetschnik, A., Rieberer, R., (2019). Eco-friendly, energy- and cost-efficient A/C system with heat pump functionality using R744 for rail application. Proceedings of the IIR Conference on Ammonia and CO2 refrigeration, Ohrid, North Macedonia.
[9] Elbel, S., Lawrence, N., (2016). Review of recent developments in advanced ejector technology. International Journal of Refrigeration, Vol. 62, p. 1-18.
[10] Bock, W., Puhl, C., 2010. Kältemaschinenöle. VDE Verlag, Berlin, Offenbach, Germany.
[11] Doerffel, C., Tannert, T., Hesse, U., (2019). Effect of the Operating Conditions on a Transcritical CO2 Refrigeration Systems Efficiency. Proceedings of the International Conference on Ammonia and CO2 Refrigeration Technologies, Ohrid, North Macedonia. Paper ID: 29.
[12] Doerffel, C., Thomas, C., Hesse, U., (2020). Experimental results of various efficiency enhancing measures for CO_2 refrigeration systems. Proceedings of the 14th IIR Gustav Lorentzen Conference on Natural Refrigerants, Kyoto, Japan.
[13] Steinjan, K., 2019. Expansionsmaschine für CO2 Kälteanlagen. Proceedings of the conference Deutsche Kälte-Klima Tagung 2019, Ulm, Germany. Paper ID: II2-10.
[14] Nickl, J., Bartzsch, R., Hesse, U., (2016). CO2-Anlage mit neuer Generation ECU. Proceedings of the conference Deutsche Kälte-Klima Tagung 2016, Kassel, Germany. Paper ID: III-05.
[15] Doerffel, C., Tannert, T., Hesse, U., 2019. Comparison of efficiency increasing methods in transcritical CO2 refrigeration systems. Proceedings of The 25th IIR International Congress of Refrigeration, Montreal, Kanada.
[16] Crespi, F., Gavagnin, G., Sanchez, D., Martinez, G., 2017. Supercritical carbon dioxide cycles for power generation: A review. Applied Energy, Vol. 195, p. 152-183.

DuEPublico

Duisburg-Essen Publications online

UNIVERSITÄT DUISBURG ESSEN

Offen im Denken

ub universitäts bibliothek

Published in: 4th European sCO2 Conference for Energy Systems, 2021

This text is made available via DuEPublico, the institutional repository of the University of Duisburg-Essen. This version may eventually differ from another version distributed by a commercial publisher.

DOI: 10.17185/duepublico/73955
URN: urn:nbn:de:hbz:464-20210330-102305-0

This work may be used under a Creative Commons Attribution 4.0 License (CC BY 4.0).