Influence of interactions between NOM and zinc oxide nanoparticles on UF membrane fouling

C. B. Ong[a,b], A. W. Mohammad[b], S. Panglisch[a]

[a] Chair of Mechanical Process Engineering/Water Technology, University Duisburg-Essen (UDE), Lotharstr. 1, 47057 Duisburg, Germany

[b] Department of Chemical and Process Engineering, Faculty of Engineering and Built Environment, Universiti Kebangsaan Malaysia, 43600 UKM Bangi, Selangor, Malaysia.

UNIVERSITÄT DUISBURG ESSEN

Open-Minded

Introduction

Natural organic matter (NOM) fouling is a main concern in membrane processes. Recent development of nanomaterial has shown as a great potential in water treatment. ZnO is a common nanomaterial that has been applied successively in photocatalysis as well as in adsorption. However, current development of nano-absorbent focusing on influence of interaction between NOM and ZnO nanoparticles on UF membrane process is not well-documented to date. Therefore, we tested the utilization of ZnO nano-absorbent in UF membrane fouling mitigation using NOM as targeted substance.

Materials & Methods

- Lab unit: Flat sheet crossflow (CF) (area = 0.014 m^2, CF velocity = 8 cms^{-1}, flux = 100 $Lh^{-1}m^{-2}$)
- Feed solution (all adjusted to pH 8.5):
  - ✓ ZnO (0.5 g/l) only ,
  - ✓ Flower soil surrogate extraction (FS) (1:500 dilution) only,
  - ✓ Mixture of ZnO and flower soil
- Membranes:

Membrane type	UH004P	UP005P	UP010P
Membrane material	PESH	PES	PES
Nominal MWCO (kDa)	4	5	10
Thickness (µm)	210-250	210-250	210-250
Hydrophilicity (º)	66.3 ± 2.0	66.8 ± 2.9	74.3 ± 1.8

Schematic diagram of crossflow system

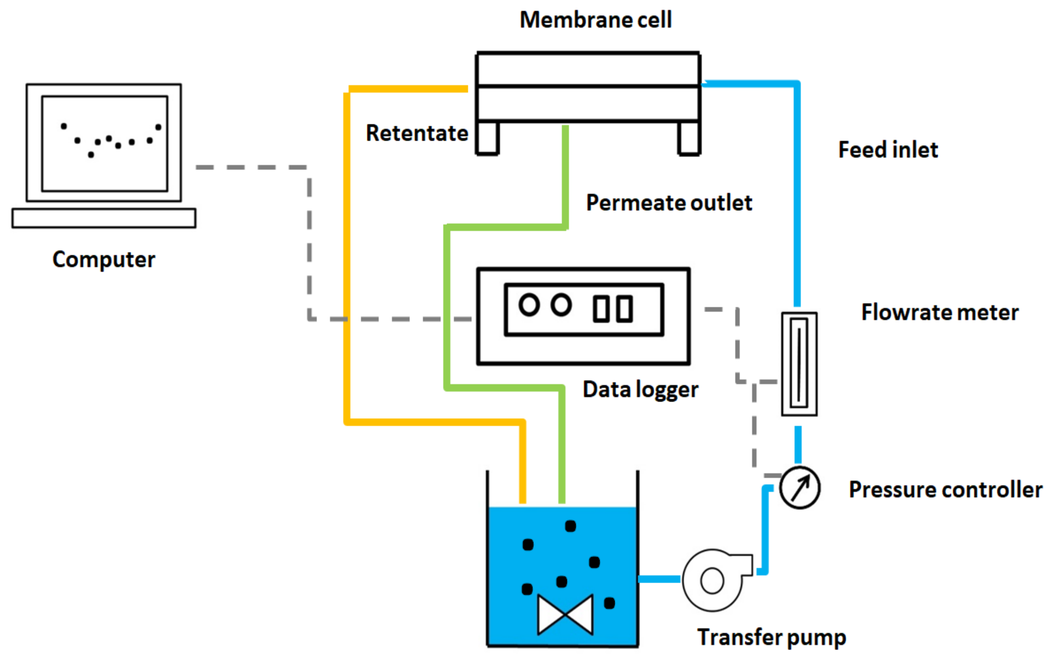

Results & Discussions

Membrane fouling behaviour

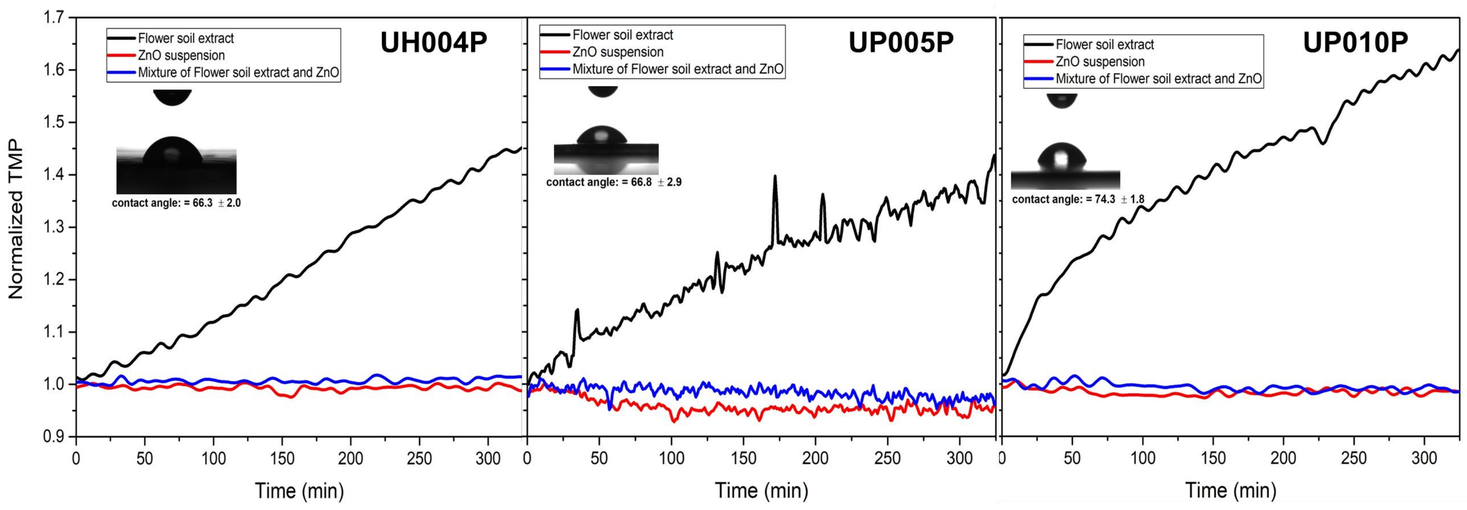

- A sharp increase of TMP can be observed for all membranes for flower soil filtration.
- TMP increment was the greatest for UP010P, which has, out of the three used membranes, the largest pore size and contact angle.
- No TMP increase was observed for the filtration of ZnO suspension only and for that of the mixture of flower soil and ZnO.

Rejection of organic compounds by membranes

Feed solution	Proposed substances at specific region in FEEM graph	Rejection %		
		UH004P	UP005P	UP010P
FS only	Tryptophan-like	33 ± 14	43 ± 7	29 ± 13
	Dissolved organic matter	35 ± 12	40 ± 11	34± 13
	Humic-like	36 ± 10	41 ± 12	34 ± 7
ZnO-FS solution	Tryptophan-like	56 ± 0	80 ± 14	52 ± 18
	Dissolved organic matter	78 ± 1	97 ± 2	63 ± 9
	Humic-like	85 ± 2	99 ± 0	75 ± 7

- Rejection of organic compounds after dosage of ZnO becomes better compared to rejection of flower soil surrogate only
- Adsorption of NOM to ZnO decreases the fouling more or less completely

UP005P Membrane foulant Morphology

- The foulant layer which consists flower soil surrogate extract look more dense compared to mixture of flower soil surrogate extract and ZnO.

Conclusions

A series of UF experiments were successfully conducted using different type of feed solutions for the purposes to investigate the influence of interactions between NOM and ZnO nanoparticles on UF membrane fouling behaviour. ZnO was found to be able to mitigate the UF fouling when treating NOM rich water.

PROCESS ENGINEERING WATER TECHNOLOGY

chin.ong@uni-due.de

Phone:+49 (0) 203 379 2797

Poster prepared for: *17. Aachener Membran Kolloquium (AMK); 13. - 15.11.2018; Aachen*

DOI: 10.17185/duepublico/49399
URN: urn:nbn:de:hbz:464-20201126-130256-8