3nd European supercritical CO_2 Conference
September 19-20, 2019, Paris, France

2019-sCO2.eu-147

PROBABILISTIC TECHNIQUE FOR SOLVING COMPUTATIONAL PROBLEM: APPLICATION OF ANT COLONY OPTIMIZATION (ACO) TO FIND THE BEST SCO_2 BRAYTON CYCLE CONFIGURATION

Mounir MECHERI*
EDF R&D
Chatou, FRANCE
Email: mounir.mecheri@edf.fr

Qiao ZHAO
EDF R&D
Chatou, FRANCE

ABSTRACT

This papers studies the potential of a probabilistic technique to solve complex problems such as thermodynamic cycle layout optimization. The Ant Colony Optimization (ACO) algorithm has been used to find an optimal configuration of a supercritical CO_2 Brayton Cycle (sCO_2-BC) for a specified application (coal power plant).

This optimization is done by coupling an existing **process simulation software** (ProSimPlus) and an existing **optimization solver** (MIDACO). In this study, more than a 1000 cycle configurations have been analyzed regarding performance, costs and the value of the Levelized Cost Of Electricity (LCOE).

Main results show that the optimal sCO_2-BC configuration depends on the optimization criteria (objective function).

INTRODUCTION AND CONTEXT

Since the beginning of sCO_2-BC studies, many theoretical works led to general recommendations to achieve best performances for several applications (nuclear, coal, concentrated solar, biomass, geothermal, waste heat) [1, 2, 3].

These recommendations are the results of a time-consuming optimizations (mainly by performing sensitivity analysis) of a high number of possible cycle configurations due to a high number of parameters and variables (heat source and heat sink temperatures, pressure ratios, CO_2 mass flows and split ratios, heat exchanger pinch temperatures) to combine with a high number of possible sCO_2-BC configurations as shown in Appendix A (number of intercooling, number of reheat, number of recompression loop, boiler configuration…) [5].

Furthermore, optimizing only the cycle efficiency leads to complex cycle architectures using several turbomachines (reheats, intercooling) and large heat exchangers, which reduces the benefits of having simple and compact cycles [5, 6, 7, 8]. In other words, maximizing the cycle efficiency leads to performant but more expensive cycles with larger footprint, reducing their competitiveness compared to existing power technologies [8, 9].

In this context, the economic should be considered within the optimization problem in addition to performance criteria. However, taking the economic into account increases the number of optimization parameters, variables and constraints, leading to complex and non-linear problems to solve [4, 10].

The "sensitivity analysis" screening method (manual optimization) is unsuitable to solve such problems because it only covers a restricted number of possible solutions and increases the risk of missing the optimal solution. Furthermore, compare to manual optimization, a computer is able to cover a very high number of calculations within a reasonable timeframe.

However, to solve the described optimization problem, the computer must be able to automatically modify the sCO_2-BC configuration as well as the corresponding operating parameters to be optimized. This paper is describing the methodology that enables automatic cycle configuration (and parameters) modification within a commercial process simulation software.

OBJECTIVES

The main objective of this paper is to use an existing optimization technique (Ant Colony Optimization) within

DOI: 10.17185/duepublico/48914

commercial process simulation software to help finding the optimal sCO_2-BC configuration for a specified application.

To do so, the method relies on the concept of "superstructures" (i.e. multi-path process flow systems). Superstructures enable to easily generate a very high number of cycle configurations within a single process flowsheet. Then, the optimization solver is able to automatically switch from one to another configuration during a process simulation routine [4].

METHODOLOGY

The optimization methodology used in this paper and developed in [4] is based on the following routine:

For a given sCO_2-BC configuration:

1) The process simulation is performed by the chosen **process simulation software** for a given set of parameters;

2) Variation of the operating condition within boundaries specified by the user (e.g, variation of the maximum cycle temperature between 200°C and 500°C…) is performed by the **optimization solver**;

3) The comparison of the cycle performances and costs for every tested case (cycle configuration + operating conditions) enables to find the optimal solution.

4) Finally, the sCO_2-BC configuration is automatically[1] switched by the **optimization solver** and the routine goes back to step 1) above. More details about the methodology are given in next paragraphs.

Superstructure for automatic flowsheet generation

The first challenge of this methodology is to enable automatic switch of sCO_2-BC configurations in the process simulation software. One solution is to use "path switches" (Figure 1) in the process flow diagram: they enable to select different configurations just by changing the switch position.

The switch position is represented by an integer variable (for example, "1" for the upper position and "2" for down position in a "2 paths" switch) as depicted in Figure 1. This integer variable becomes an optimization variable that the optimization solver is free to change, as explain in the "Optimization details" section below. In these conditions, the solver can automatically generate different cycle architectures.

[1] The specificity of the ACO optimization is its ability to automatically select "population" (here cycle configuration) regarding both history and random principle [4, 7] as explained in "Optimization details" section in this paper.

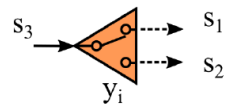

$$S_1 = S_3,\ if\ y_i = 1$$
$$S_1 = S_3,\ if\ y_i = 2$$

Figure 1: example of a "2 path" switch with its integer decision variable (y_i)

In this study, the global flowsheet is using several switches ("2 or 3 paths" switches) enabling a high number of possible cycle configurations, using different components (or units). This global flowsheet is called a "superstructure". Next figure is showing an example of a very simple superstructure with 3 different units using a reactant "A" to create two products "C" and "D":

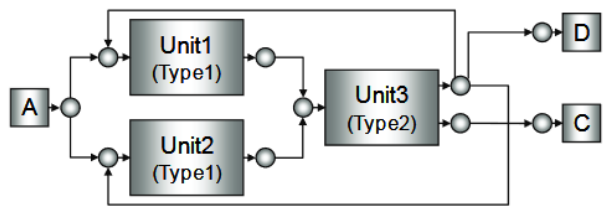

Figure 2: Example of a Superstructure process flow [11]

In the case of sCO_2-BC configuration optimization, the superstructure can be divided in 3 main parts:

i. the cooling and compression part (dealing with the number a recompression loop and the number of intercooling),
ii. the heat source and electricity production part (dealing with the number of reheat and the boiler configuration),
iii. and the heat integration part (dealing with the number of recuperators).

The Figure 3 illustrates a simple superstructure of a sCO_2-BC with three "2 paths" switches.

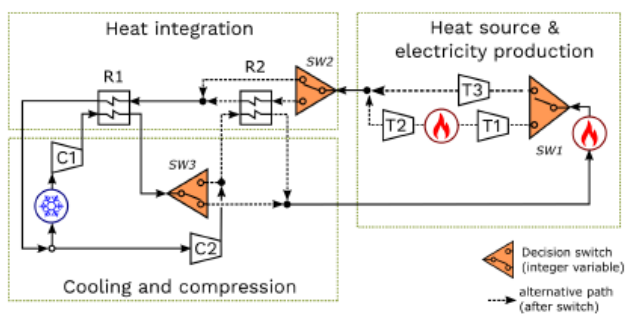

Figure 3: Simple superstructure of sCO_2 Brayton cycle [4]

An example of the optimal configuration of the superstructure shown in Figure 3 is given in Appendix B.

DOI: 10.17185/duepublico/48914

Non-linear optimization problem

Using integer variables in the optimization process leads to strongly non-linear and non-convex problems. These problems cannot be solved with classical/basic optimization methods such as gradient method.

In this study, Mixed Integer Nonlinear Programming (MINLP) approach is used combined with a meta-heuristic optimization technique: Ant Colony Optimization (ACO).

The ACO algorithm is a probabilistic technique used for solving computational problems [12]. Further details regarding this technique are given in [12]. The ACO solver used in this study is MIDACO Solver [13].

Problem definition and Pareto front

To solve an optimization problem, the user needs to define the objective function(s), the constraints/boundaries, the fixed parameters and the optimization variables (i.e. variable that can be varied by the optimization solver to reach objectives).

For example:

- the objective function can be to maximize the cycle efficiency (or to minimize the cost of electricity production),
- the constraints and boundaries can be the minimal and maximal allowable temperatures and pressures due to materials constraints, or the heat exchanger temperature pinch, the amount of heat available in the boiler…),
- the fixed parameters can be equipment data (e.g. the turbomachinery efficiency),
- the optimization variables can be some operating parameters such as pressure ratios, temperature, flow rates… and other integer/real variables such as the "switch path number"…

The MIDACO solver enables "multi-objective" optimization, which means that several criteria (for example, both "maximization of performance" and "reduction of cost of electricity") can be sought by the optimizer solver.

The use of "multi-objective" optimization leads to a "Pareto front" (situation where improving one objective is degrading another objective).

Communication between the process simulation software and the solver

As explained, one objective of this work is to use a commercial process simulation software to ease the construction of the superstructure. In this study, the software ProSimPlus is used [14].

ProSimPlus has its own optimization module but is also able to interact with external solvers. ProSimPlus sends simulation results (for a given set of variables) to the MIDACO solver (MINLP Optimization) which analyzes them and proposes another sCO_2-BC configuration (or operating conditions) to test (see Figure 4).

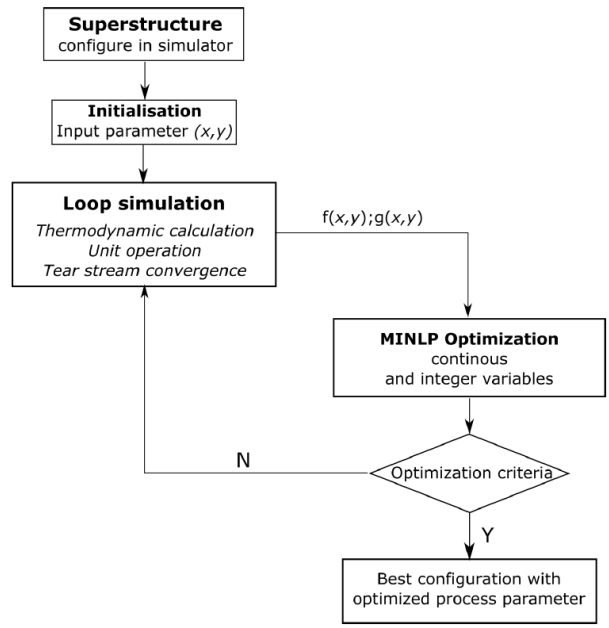

Figure 4: Program structure of simulator-based superstructure optimization [4]

Optimization details: concept of seed

The randomness of the initial ant colony population in the MIDACO Solver is controlled by a pseudo-random number generator called "seed" (the seed determines the sequence of pseudo-random numbers sampled by the generator) [15].

Changing the "seed value" in MIDACO Solver lead to a different result and prevent the optimizer of being trapped in a local optimum sector (see the iterations of a "4 seeds" optimization example in Figure 5).

The impact of the seed selection normally varies with the complexity of the problem. In general, the more complex the problem, the bigger the influence of the seed can be [4, 7].

For difficult problems, it is therefore often a more promising strategy to execute several short runs of MIDACO Solver with different random seeds, rather than performing only one very long run [15].

DOI: 10.17185/duepublico/48914

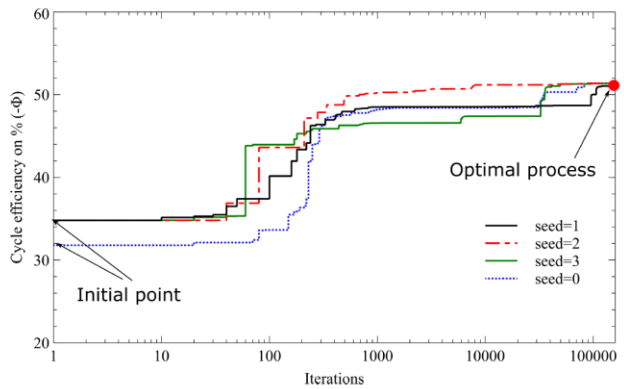

Figure 5: Optimization progress of four runs with different random seeds [4]

Optimization details: "feasible path" vs "unfeasible path"

Simulation convergence of complex processes (with recycling loops) can be very challenging. To ease convergence, the process simulation software creates "tear streams". In this case, some recycling loops are cut and the software takes care of equalizing parameters from one side to the other side of the tear-streams.

There are two ways to use optimization module with tear steams. The "feasible path" mode, which means that the software is handling the equalization of tear-stream at each calculation (ensuring convergence of each calculation but is very long).

The "unfeasible path" mode, where the tear-streams are handled by the optimization solver as "optimization parameter" (enabling to avoid convergence of useless configurations).

In this study, "feasible path" leads to locals optimum and is then not compatible with the problem to solve as shown in Figure 6.

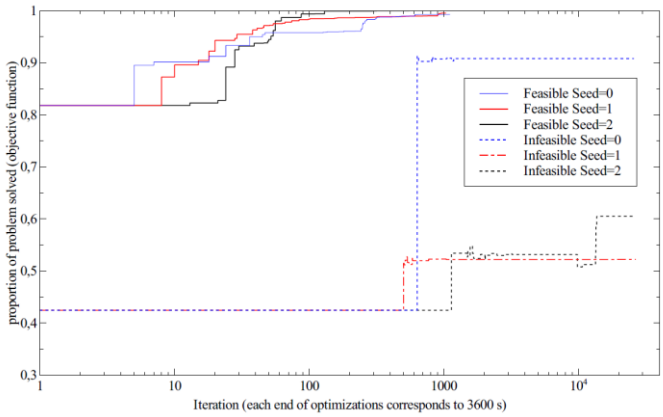

Figure 6: Relative performance comparison between "Feasible Path" approach and "Infeasible Path" approach [4].

Optimization details: optimization progress

Evolution of created populations evolves with time (i.e. number of iteration). Generation of a high number of populations coming from different seed enables to show the optimization progress (in colonies and seeds but also, globally) as shown in an example of cycle efficiency optimization in Figure 7.

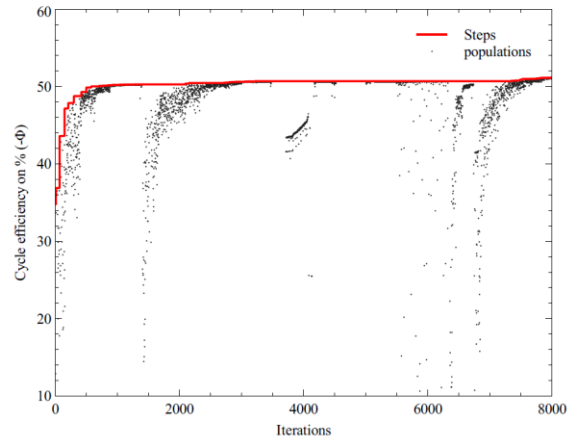

Figure 7: Optimization progress of sCO_2 Brayton cycle [4]

PROBLEM DEFINITION

Superstructure used in this study [4]

The final superstructure used is this study is plotted in Appendix C. It is composed of 3 "two-path" switched and 2 "three-path" switch, enabling to test more than 1000 sCO_2-BC configurations. For each cases, the solver can modify all parameters and variables within the given boundaries .

Objective functions [4]

In order to show the importance on the objective function, the problem has been solved in two steps:

a) First, the problem has been set with only one objective function: maximization of the cycle efficiency
b) Then, the problem is solved with multi-objective method. Three objectives have been chosen:
   i. maximization of the cycle efficiency,
   ii. minimization of the investment costs (CAPEX) and,
   iii. minimization of the Levelized Cost of Electricity (LCOE).

In the MIDACO Solver, it is possible to weight every objective in order to avoid conflicting situations (e.g. maximizing the efficiency implies higher costs, which is in opposition with minimizing the CAPEX). In this study, the dominating weight has been set on the LCOE objective. The implementation of the economics in the problem is very important because it enables to release some technical constraints (or boundaries) initially set to avoid unrealistic solutions.

DOI: 10.17185/duepublico/48914

For example, the minimum "pinch temperature" of recuperators is initially fixed to 10 K in the "mono-objective" optimization otherwise its theoretical optimal value for best performance tends to zero (i.e. heat exchanger with infinite exchange surface), which has no industrial meaning.

However, in "multi-objective" optimization, it is not necessary to put a lower limit for the "pinch temperature" value because one objective is to reduce costs (efficient heat exchangers with low temperature pinch value are expensive).

Next tables are showing "assumptions", "constraints" and "optimization variables" of the optimization problem (see considered superstructure in the appendix C).

Assumptions on fixed variables and equipment data [4]

Next table shows the fixed variables and equipment data for the optimization problem.

Parameter	Value
Turbine inlet temperature	620 °C
Turbine inlet temperature after reheating	620 °C
CO_2 flowrate before main cooling	6 000 kg/s
Minimum pinch temperature value (mono-objective optimization)	10
Turbine isentropic efficiency	90 %
Compressor isentropic efficiency (-)	89 %
Pressure drop in every component (% of inlet pressure)	1 %

Optimization variables and their bounds [4]

Next table shows the optimization variables and theirs bounds for the final superstructure (depicted in appendix C):

Optimized continuous variables	Bounds
Main compressor pressure inlet (MPa)	[3.3 - 10]
Main compressor pressure outlet (MPa)	[3.3 - 30]
Secondary compressor pressure outlet (MPa)	[3.3 - 30]
Secondary compressor pressure outlet (MPa)	[3.3 - 30]
CO_2 temperature at the heat sink outlet (°C)	[31.2 - 100]
Split flow for second recompression loop	[0 - 0.5]
Split flow for third recompression loop	[0 - 0.5]
Split flow for forth recompression loop	[0 - 0.5]
Temperature of the cold side outlet of the first recuperator (°C)	[31.2 - 620]
Temperature of the hot side outlet of the second and third recuperator (°C)	[31.2 - 620]
Pressure ratio of the second, the third and the forth turbines	[1 - 5]
Flow fraction passing to the seventh turbine	[0 - 0.5]
Flow fraction of CO_2 preheated by flue gases	[0 - 0.5]

Optimized integer variables	Values
Switch 1	1, 2 or 3
Switch 2	1, 2 or 3
Switch 3	1 or 2
Switch 4	1 or 2
Switch 5	1 or 2

Main assumption regarding calculation of the Levelized Cost Of Electricity (LCOE)

The LCOE of considered cycles is calculated with the following equation:

$$\mathrm{LCOE} = \frac{\mathrm{CAPEX} \times f_a + \mathrm{OPEX}}{P_e \times \mathrm{Hour}_{year}}$$

where:

- CAPEX is the capital expenditure of main components (recuperators, heat sink, turbines, compressors and the boiler with its gas treatment unit) taking into account the piping, Instrumentation and Control, land, civil and transportation;
- OPEX is the operational expenditure including Operation & Maintenance and coal price;
- f_a the discount factor (taking into account the discount rate (8%) and the plant lifetime (40 yr));
- P_e the electrical power output of the power plant;
- Hour_{year}, the plant availability (7884 h/yr);

RESULTS

As explained, the problem has been solved with a mono-objective function first (maximization of performance) and then with a multi-objective function.

The Figure 8 depicts the convergence of the mono-objective problem (with 4 different seeds and 100 000 iterations). Results shows that the best configuration (according to given hypotheses, boundaries and constraints) is a "2-reheat double-recompression" cycle (Figure 9) and achieve a net cycle efficiency of ~52%.

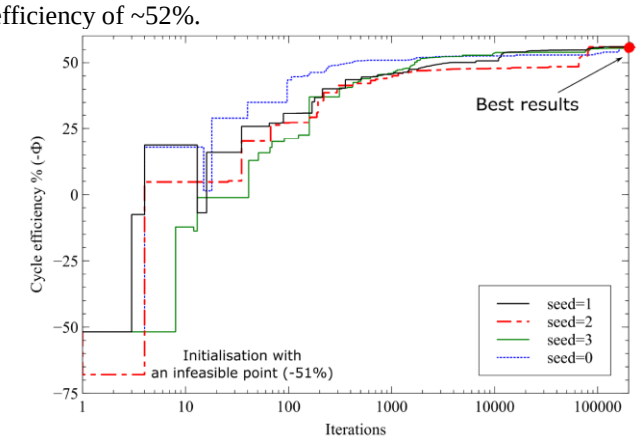

Figure 8: Energy performance optimization progress of four runs with different random-seeds [4]

DOI: 10.17185/duepublico/48914

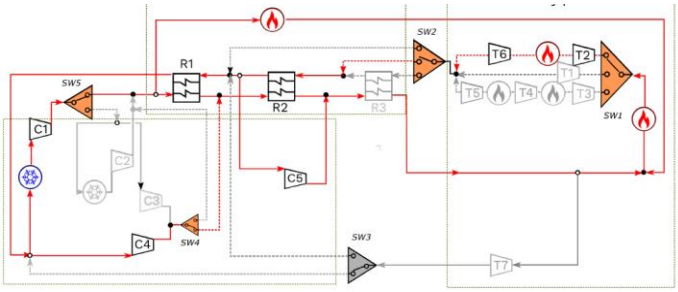

Figure 9: "Energy performance" optimization result: a "2-reheat double-recompression" cycle [4]

This cycle configuration is unusual, using a third compressor to compress a fraction of the CO_2 mass flow at the high-temperature recuperator's hot stream outlet to re-inject it just at the boiler inlet. This configuration uses a high number of turbomachineries and some optimization variables logically reach their lower/higher bounds (e.g. maximal temperature and pressure of the cycle…).

In order to be compared with the multi-objective solution, the LCOE of this mono-objective solution has been estimated (~61 $/MWh). Table 1 is comparing main results between mono-objective and multi-objective optimization.

While using the multi-objective problem (and thus releasing some equipment constraints such as the temperature pinch value of recuperators), the result is different as shown in the following section.

Pareto front and "multi-objective" optimization result

The Figure 10 shows the evolution of the optimization process (each gray dots represents a calculated configuration). The star represents the initial point (i.e. the mono-objective solution described in the first paragraph of the "Results" section).

Efficiency and CAPEX are respectively represented in "x" and "y" axis. The third dimension of the graph is represented by color (LCOE). It is interesting to see that the mono-objective solution (star) is located on a front (due to pinch constraint) at high cost (because reducing cost was not an objective at this moment).

Then, some new populations start finding new configurations (due to addition of economic criteria and the release of the pinch constraint). An example of the search history and a 3D plot of the Pareto font are given in the appendix D.

The Multi-objective solution enables to reach higher performance at lower cost electricity. This is due to fact that releasing constraints enables to reach higher performances. Then, the economic functions enable to gauge/weigh the cost impact of this increment of performance.

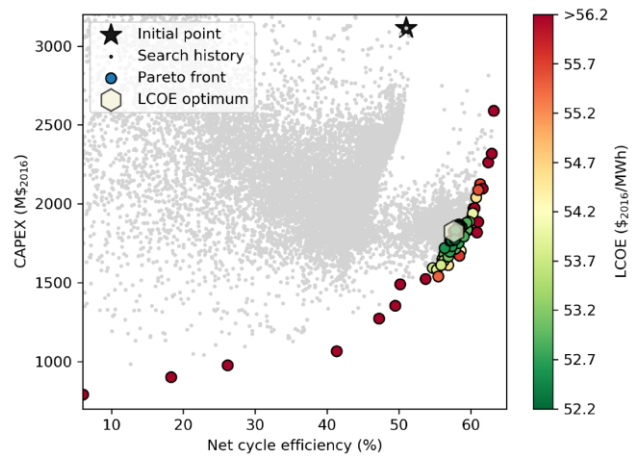

Figure 10: Investment cost versus plant efficiency versus LCOE (color axis) at different generation [4]

Finally, the best multi-objective solution is a "single-reheat with one intercooling" configuration (Figure 11) reaching a net cycle efficiency of ~57%[2] for a LCOE of ~52 $/MWh. For a 1GWe base load power plant (i.e. producing during more than 8000h/yr), it represents a save of about 68 M$/yr.

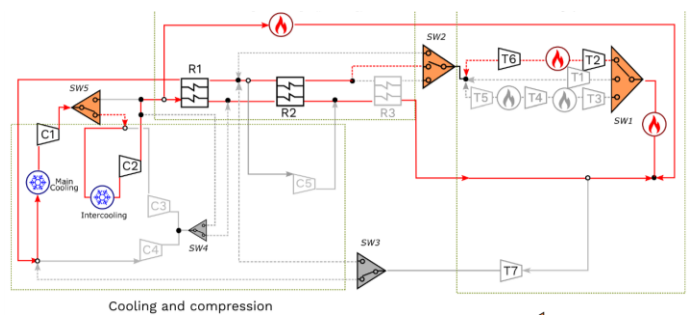

Figure 11: Techno-economic multi-objective optimization result: a "single-reheat with one intercooling" cycle [4]

Table 1: comparison between mono and multi objective optimization results

Optimization	Net cycle eff.	CAPEX	LCOE
Mono-objective	51%	3,124 M$	61 $/MWh
Multi-objective	57% [2]	1,826 M$	52.3 $/MWh

[2] This better performance compared to "mono-objective" optimization is due to the fact that the "pinch temperature" constraint of 10 K has been relaxed in the "multi-objective" calculation. Then, the optimizer selects the best compromise between the performance and the cost of the heat-exchangers. In this case, it appears that it is worth paying extra-cost of very performant heat-exchanger (with low "pinch temperature" value) for having both a lower LCOE and higher performance. R1 pinch is equal to 5K while R2 pinch reaches 20K.

DOI: 10.17185/duepublico/48914

CONCLUSION AND PERSPECTIVES

The objective of coupling a commercial process simulation software with the probabilistic optimization technique ACO (Ant Colony Optimization) to solve complex multivariable computational problems (selection of the best sCO_2-BC configuration and its best operating conditions in the case of electricity production) has been successfully reached. This solution offers more flexibility in the optimum research compared to "sensitivity analysis" method and does not need graphical/visual comparison to find the best option.

The study shows that the definition of a non-linear optimization problem has an impact on the results of the final solution. For example, in this study, the best economic cycle configuration (multi-objective) differs from the energetic (mono-objective) solution. Indeed, the theoretical best configuration would have an infinite number of reheat (or number of intercooling) and heat exchangers with an infinite surface.

Also, it shows that some restrictions initially establish to contain the technical optimization in realistic options (for example: fixing the minimal recuperator temperature pinch value to 10K) have no real meaning while considering multi-objectives optimization with economic objective. Thus, relaxing some initial "conservative" technical constraints can lead to more efficient or/and cheaper solutions.

This work relies on several assumptions and hypothesis (cost correlations, equipment data) that need to be refined for more accurate results. Also, this study has been focusing on the global methodology and the application to a complex case. Then, more efforts must now be made to improve and consolidate this tool by including uncertainties in the process calculation, by reducing the computational time required for the optimization itself and by improving the construction of the superstructure.

NOMENCLATURE

ACO: Ant Colony Optimization
CAPEX: CAPital EXpenditure
OPEX: OPerational EXpenditure
LCOE: Levlized Cost Of Electricity
LRGP : Laboratoire Réactions et Génie des Procédés
sCO_2-BC: supercritical CO_2 Brayton Cycle

ACKNOWLEDGEMENTS

The results of this study are extracted from the PhD of Qiao ZHAO done in EDF and LRGP from 2015 and 2018 [4].

REFERENCES

[1]: Feher E.G. – The supercritical thermodynamic power cycle; Energy Convers Manag, 8 (2) (1968), pp. 85-90

[2]: Angelino G. – Carbon dioxide condensation cycles for power production; ASME; J. Eng. Power; 1968.

[3]: Dostal V., Driscoll M.J., and Hejzlar P. – A supercritical carbon dioxide cycle for next generation nuclear reactors. PhD thesis, MIT, 2004.

[4]: Zhao Q. – Conception and optimization of supercritical CO_2 Brayton cycles for coal-fired power plant application; Université de Lorraine, 2018. English. NNT: 2018LORR0080 http://docnum.univ-lorraine.fr/public/DDOC_T_2018_0080_ZHAO.pdf

[5]: Crespi F., Gavagnin G., Sanchez D., Martinez S.M. Supercritical carbon dioxide cycles for power generation: A review; Applied Energy 195 (2017) 152–183

[6]: Serrano I.P, Linares J.I., Cantizano A., Moratilla B.Y – Enhanced arrangement for recuperators in supercritical CO_2 Brayton power cycle for energy conversion in fusion reactors; Fusion Engineering and Design; Volume 89, Issues 9–10, October 2014, Pages 1909-1912; https://doi.org/10.1016/j.fusengdes.2014.03.083

[7]: Wang L., Pan L.M, Wang J, Chen D., Huang Y., Hu L. – Investigation on the temperature sensitivity of the S-CO_2 Brayton cycle efficiency, Energy, Volume 178, 2019, Pages 739-750, ISSN 0360-5442, https://doi.org/10.1016/j.energy.2019.04.100

[8]: Marchionni M., Bianchi G., Tsamos K.M., Tassou S.A – Techno-economic comparison of different cycle architectures for high temperature waste heat to power conversion systems using CO_2 in supercritical phase; 1st International Conference on Sustainable Energy and Resource Use in Food Chains, ICSEF 2017, 19-20 April 2017, Berkshire, UK

[9]: Discroll M.J. – Supercritical CO2 Plant Cost Assessment; Center for Advanced Nuclear Energy Systems MIT Nuclear Engineering Department; September 2004 http://citeseerx.ist.psu.edu/viewdoc/download?doi=10.1.1.502.4874&rep=rep1&type=pdf

[10] Khadse A., Blanchette L., Kapat J., Vasu S., Hossain J., Donazollo A. – Optimization of Supercritical CO_2 Brayton Cycle for Simple Cycle Gas Turbines Exhaust Heat Recovery Using Genetic Algorithm; Journal of Energy Resources Technology Copyright VC 2018 by ASME JULY 2018, Vol. 140 / 071601-1

[11]: Henao C.A., A superstructure Modeling Framework For Process Synthesis Using Surrogate Models; University Of Wisconsin-Madison; 2012;

[12]: M. Dorigo, T. Stützle, Ant Colony Optimization: Overview and Recent Advances. M. Gendreau and Y. Potvin, editors, Handbook of Metaheuristics, 2nd edition. Vol. 146 in

DOI: 10.17185/duepublico/48914

International Series in Operations Research & Management Science, pp. 227--263. Springer, Verlag, New York, 2010. https://rd.springer.com/chapter/10.1007%2F978-1-4419-1665-5_8

[13]: MIDACO Solver http://www.midaco-solver.com/

[14]: ProSimPlus; Steady-State Process Simulation and Optimization [accessed April 2019]: http://www.prosim.net/bibliotheque/File/Brochures/Brochure_PSP-En-2018-compressed.pdf

[15]: User manual of MIDACO-Solver; [accessed april 2019] http://www.midaco-solver.com/data/other/MIDACO_User_Manual.pdf

DOI: 10.17185/duepublico/48914

APPENDIX A: CLASSIFICATION OF FEW INDIVIDUAL PROCESS MODIFICATIONS [4]

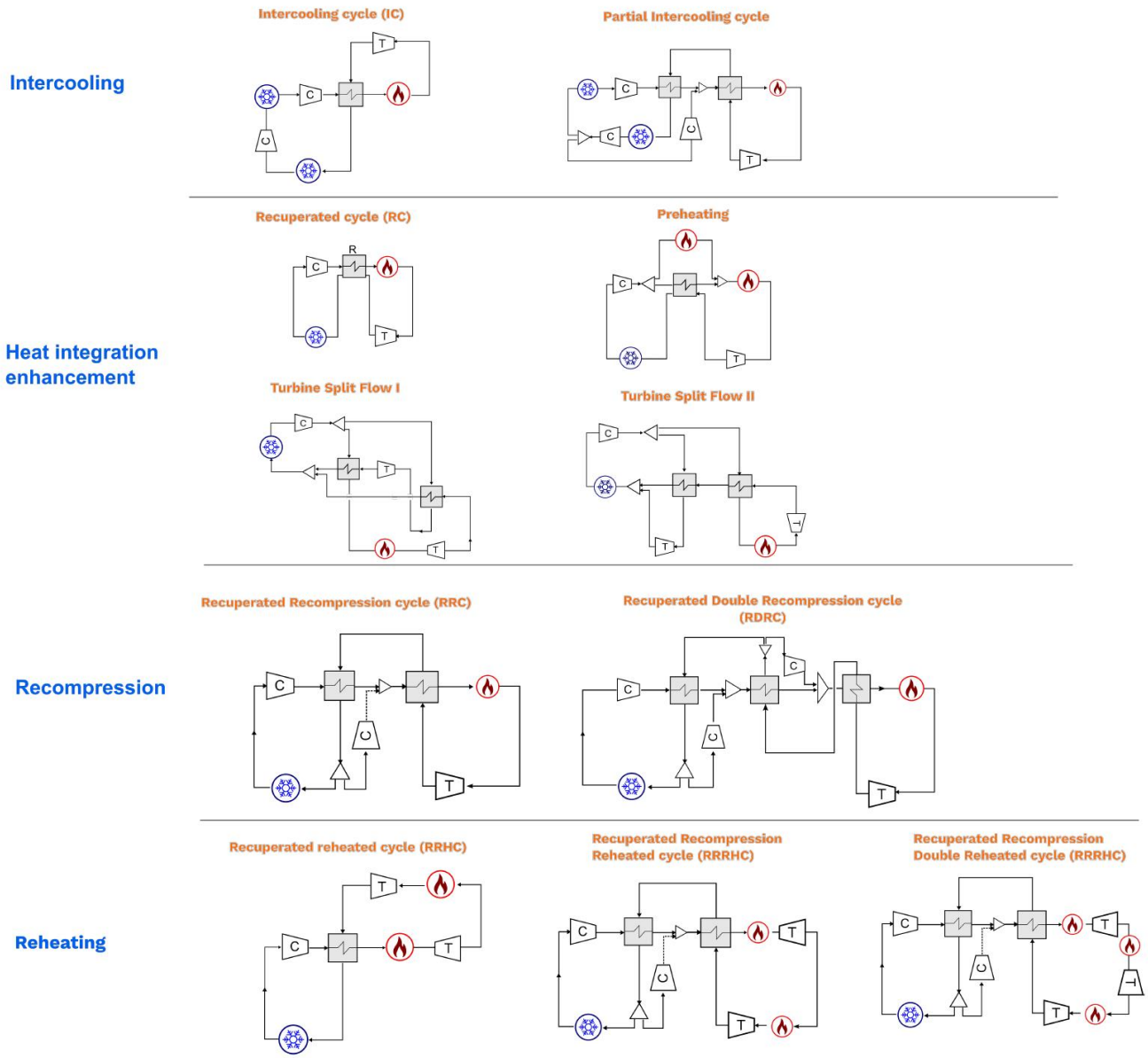

Figure 12: Classification of a few individual process modifications of sCO_2 Brayton cycle [4]

DOI: 10.17185/duepublico/48914

APPENDIX B:

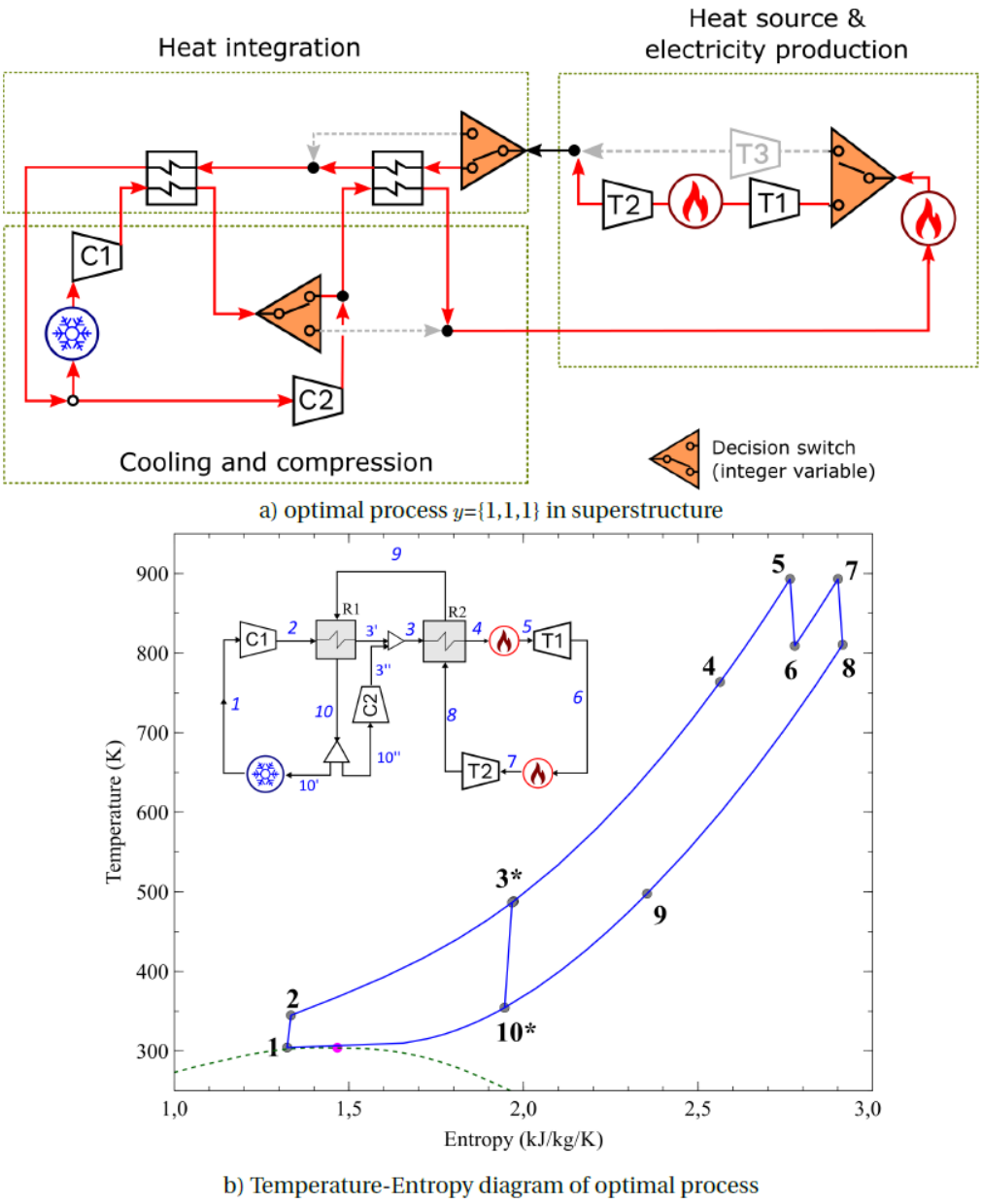

Figure 13: Process synthesis result: optimal flowsheet for the simple superstructure of sCO_2 Brayton cycle [4]

DOI: 10.17185/duepublico/48914

APPENDIX C:

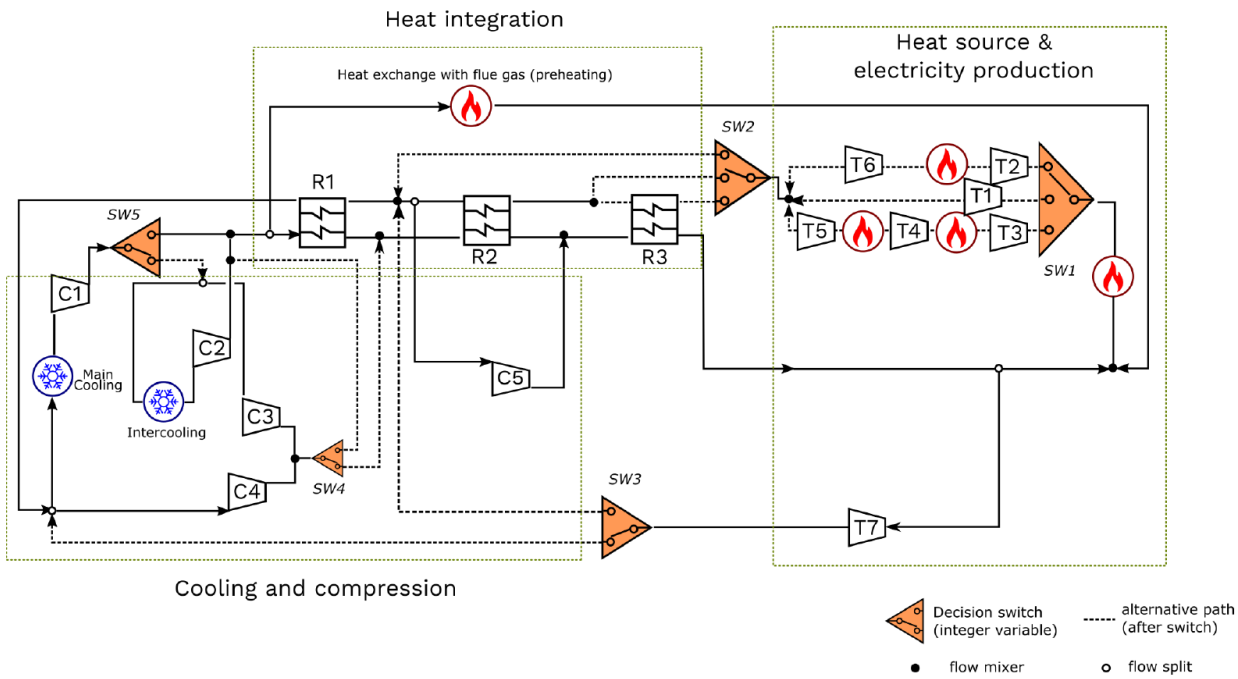

Figure 14: Superstructure for sCO_2 Brayton cycle (2^7 x 3^2 = 1152 structural alternatives) [4]

APPENDIX D:

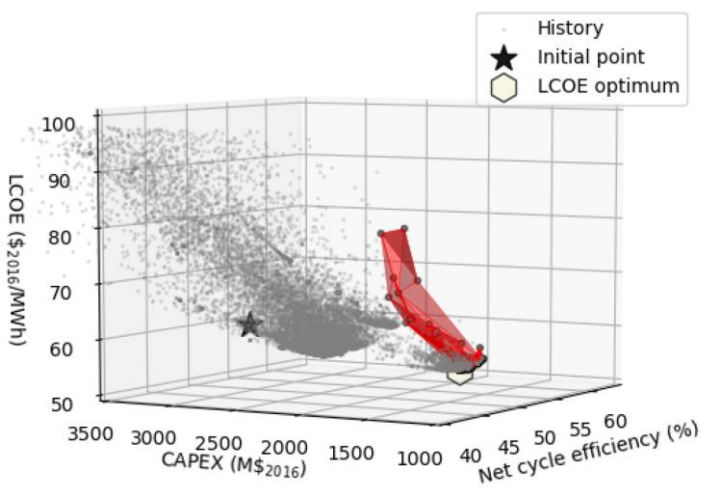

Content	Unit	Initialization (Case B)	Best result
Cycle efficiency (with penalty introduced by flue gas)	%-pts	50.94	57.62
Net power plant efficiency LHV ($\eta_{plant} = \eta_{boiler} \times \eta_{cycle} \times \eta_{alt} \times \eta_{aux}$)	%-pts	45.98	52.01
Production electricity	MWh/year	9 453 871	6 659 504
CAPEX total	$/MWh	25.69	21.31
OPEX total	$/MWh	35.16	30.95
LCOE	$/MWh	60.86	52.26

Figure 15: 3D representation of optimization iteration process. Axis are the three objective functions: LCOE, CAPEX and net cycle efficiency) and Techno-economic results of energy-optimal process and LCOE-optimal process [4]

DOI: 10.17185/duepublico/48914

APPENDIX E:

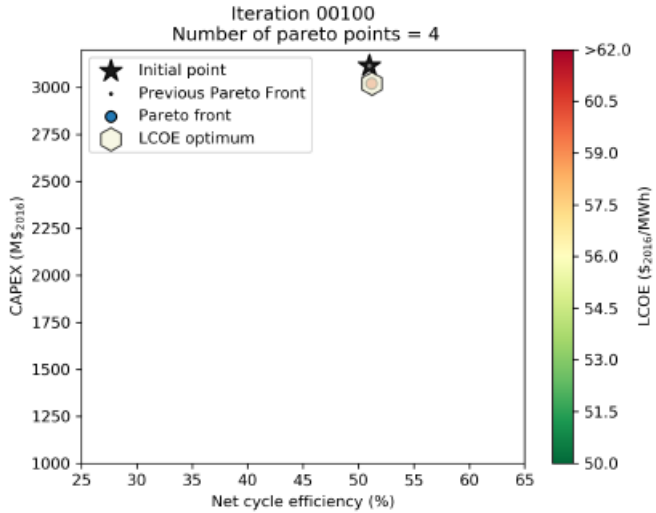

Iteration 100

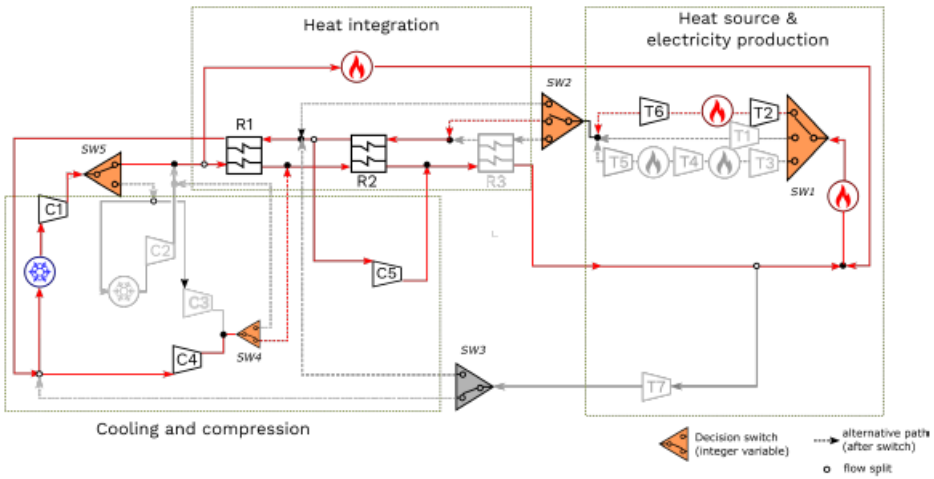

y={3, 2, 1, 1, 1}

single reheating double recompression configuration

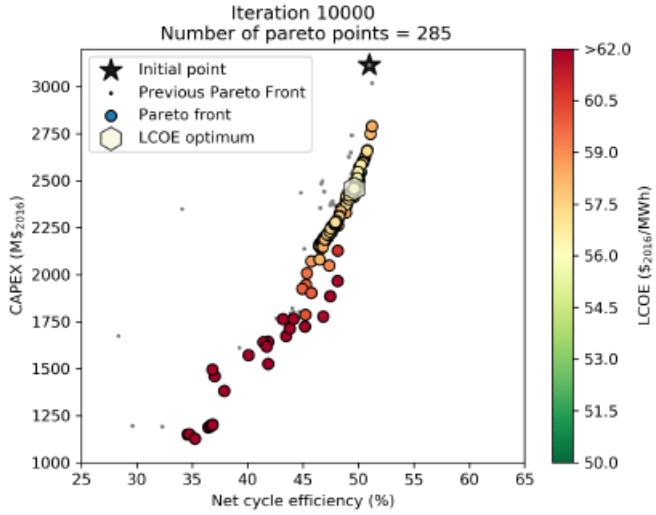

Iteration 10000

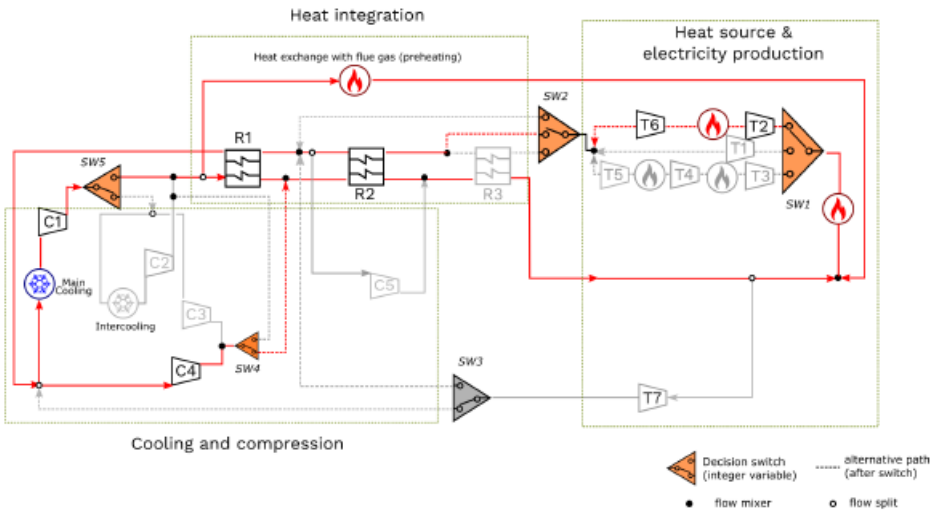

y={3, 2, 1, 1, 1}

single reheating single recompression configuration

DOI: 10.17185/duepublico/48914

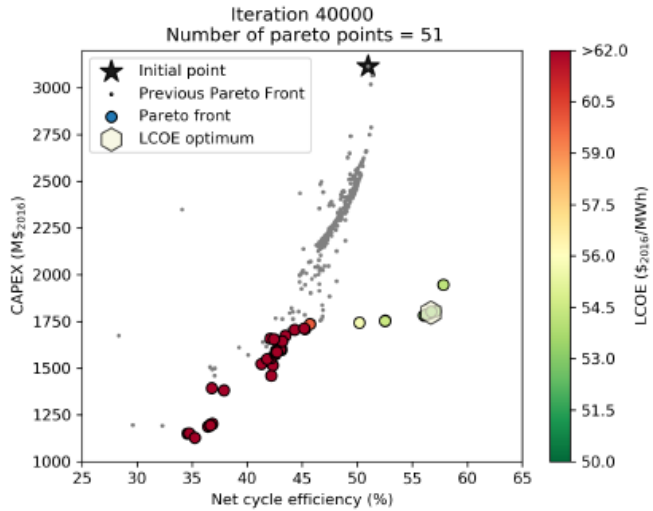

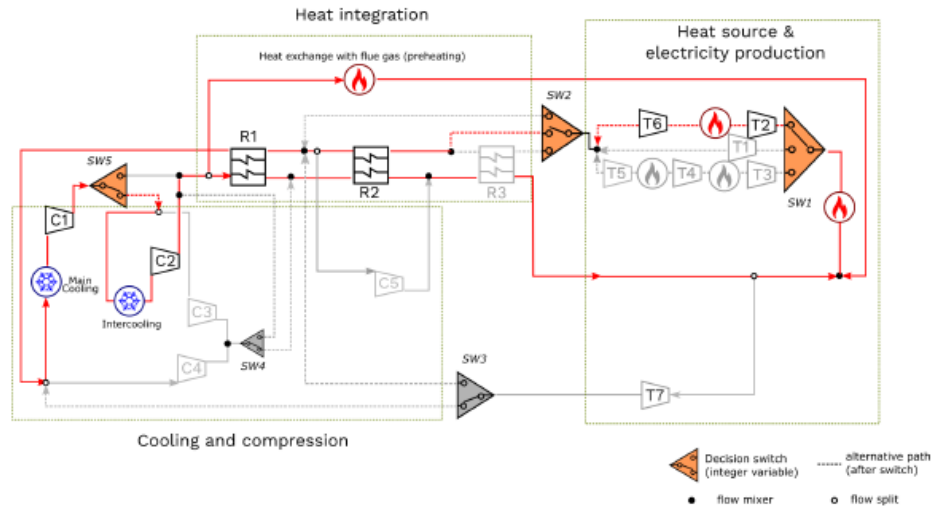

Iteration 40000

y={3, 2, 1, 1, 2}
single reheating intercooling configuration

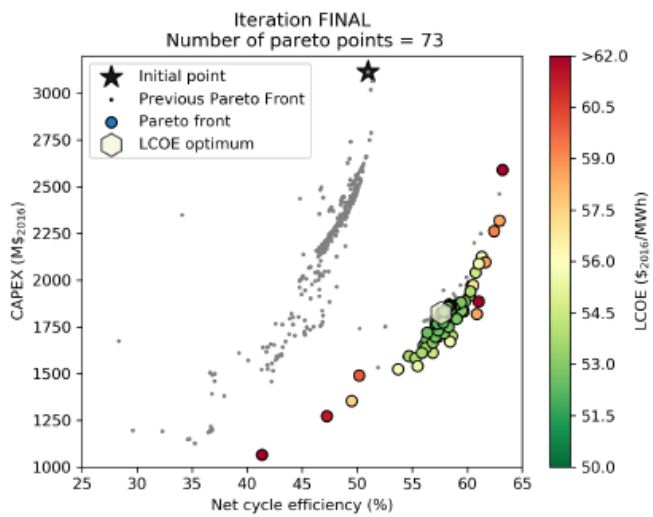

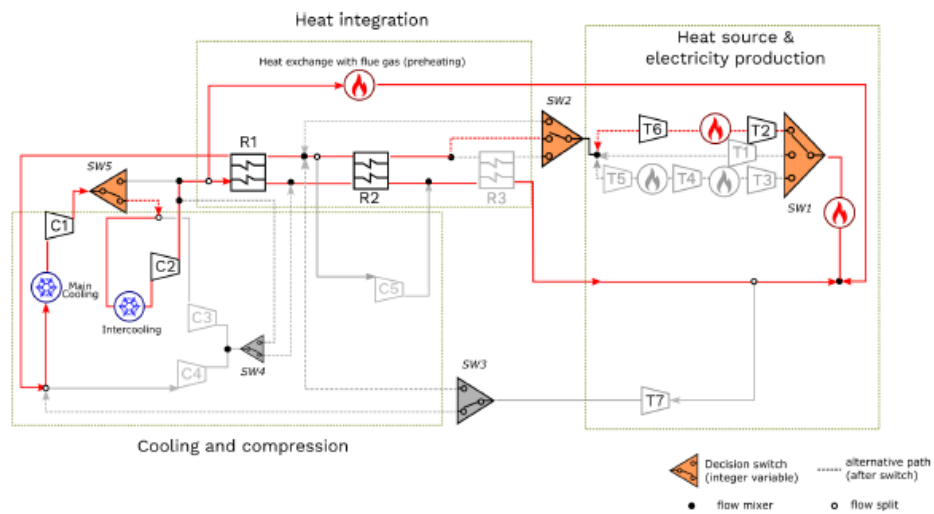

Iteration 65800

y={3, 2, 1, 1, 2}
single reheating intercooling configuration

Figure 16: Evolution of Pareto front on function of iteration as well as instantaneous best process configuration [4]

DOI: 10.17185/duepublico/48914

DOI: 10.17185/duepublico/48914
URN: urn:nbn:de:hbz:464-20191004-153153-8