3rd European supercritical CO2 Conference
September 19-20, 2019, Paris, France

2019-sCO2.eu-139

# THERMOECONOMIC MODELING AND ANALYSIS OF $SCO_2$ BRAYTON CYCLES

**Mathias Penkuhn***
Technische Universität Berlin
Institute for Energy Engineering
Berlin, Germany
Email: mathias.penkuhn@tu-berlin.de

**George Tsatsaronis***
Technische Universität Berlin
Institute for Energy Engineering
Berlin, Germany
Email: georgios.tsatsaronis@tu-berlin.de

## ABSTRACT

Supercritical $CO_2$ ($sCO_2$) power cycles provide the possibility to significantly improve power generation from fossil fuels and renewable sources considering thermodynamic efficiency, economics, and flexibility. In the recent years, the increased attention for this technology led to numerous efforts to improve cycle efficiency considering several potential applications. Nevertheless, more complex cycle designs which provide the opportunity to increase the cycle efficiency have to be economically justified. However, due to the current state of research and development, and the prospective commercialization in the future, no final conclusions in terms of cycle design can be made because reliable economic data are not available.

The scope of the present study is the analysis and comparison of several generic $sCO_2$ Brayton cycle designs for power generation in terms of their economic feasibility. Due to the large number of highly uncertain or nonexistent economic parameters in case of $sCO_2$ Brayton cycles, an approach is used that reformulates the economic problem by introducing dimensionless numbers and exploiting thermoeconomic similitude. It provides a first possibility to analyze the economic impact of employing different cycle improvement options like reheating, recompression, and intercooling using the simple recuperated cycle design as a reference. Finally, the possibility to further generalize the findings is discussed.

## INTRODUCTION

Over the last decade, the application of supercritical $CO_2$ ($sCO_2$) for power generation has received substantial interest. The prospects of a high-efficiency, low-emission technology that at the same time features favorable economics and also provides higher operational flexibility [1] is driving extensive research and development activities worldwide.

Potential adoption of $sCO_2$ technology includes a variety of different applications [1–3], ranging from fossil-fuel [4–6], nuclear [7–9], and concentrated-solar [10–13] to waste-heat [14–16] based power generation. In contrast to conventional water-steam-based technologies [17], $sCO_2$ power cycles are generally characterized by high-temperatures, high-pressure but low-pressure ratio, and highly-recuperative designs [18]. This leads to higher efficiencies in comparison to water-steam based power cycles operating at comparable conditions, and provides the possibility of considerably smaller turbomachinery [1].

The research activities have been directed to the identification of thermodynamically efficient power cycle designs. The compilation of Crespi et al. [18] shows a large variety of potential direct and indirect $sCO_2$ cycles for power generation. Some cycle designs, e.g., the recompression cycle which uses a split-compression design, and the Allam cycle have been identified as particularly promising designs. However, the most important question regarding the economic feasibility remains largely unanswered until today. Only limited data for economic studies [6, 16, 19, 20] is available and can be regarded as of highly uncertain quality. Therefore, despite the large amount of information on thermodynamically highly-efficient $sCO_2$ power cycle designs, it is not clear which designs actually bear the potential for long-term commercialization.

Based on experience, it is well-known that higher-efficiencies are often achieved by designing more complex systems incorporating established improvement options. However, this results in the conflicting aspects considering the demand for achieving high-efficiency at superior economic performance. In the present study on indirect (closed-cycle) $sCO_2$ power cycles considering different improvement options, the focus is put on developing a robust approach to analyze the different cycle designs regarding their thermoeconomic potential. This is achieved by reducing the number of uncertain parameters using similitude theory. Based on the used approach, different cycles are compared and their potential application areas for high-efficiency and economically viable power generation are discussed.

## SYSTEM DESCRIPTION

The recent gain in interest concerning the application of $sCO_2$ cycles for power generation resulted in the proposition of numerous different cycle designs [18]. The objective of most

* corresponding author(s)

DOI: 10.17185/duepublico/48909

studies on $sCO_2$ power cycles was the achievement of higher thermodynamic efficiencies. For that, a large subset of potential designs were derived using well-known principles for cycle improvement, e.g., intercooled compression (intercooling), reheating, and split-recompression which is also simply known as recompression. Therefore, the present study concentrates on the thermodynamic and economic improvement potential of the simple recuperated $sCO_2$ Brayton cycle considering the integration of the three different improvement options mentioned before.

### Cycle Design

With a large set of possible $sCO_2$ power cycle designs being suggested in the literature [18], it is advantageous to use a hierarchical design approach to identify and order each cycle design according to its features. The early works of Gokhshtein and Dekhtyarev [21–23], Angelino [24, 25] and Feher [26] have identified the main features of a potential $sCO_2$ power cycle. Due to the particular properties of $CO_2$ which are different from that of water ($H_2O$), $sCO_2$ cycles are found to be configurations that exhibit a high-temperature, high-pressure but low-pressure ratio, and highly recuperative characteristic. The minimum configuration of such a power cycle consists of a compressor, turbine, heat exchangers for heat supply and removal, and a recuperator connecting the high-pressure and low-pressure parts. Heat recuperation is necessary and an advantageous option for improving the thermodynamic efficiency because of the low-pressure ratio with the turbine outlet temperature still being high and far away from the critical point of $CO_2$ (30.98 °C, 73.77 bar) around which the heat removal is carried out.

Based on the given considerations, a systematic $sCO_2$ power cycle design hierarchy is used that is shown in Figure 1. The reference design is the $sCO_2$ power cycle with recuperation, termed as Design (1), as depicted in Figure 2. This cycle is considered as the reference case with a single cooler for heat removal (E1), a recuperator (E2), and the single high-temperature heater (E3). Furthermore, the main compressor (C1A) which is connected by a shaft to the turbine (M1A) and the electric generator (G1).

The first improvement option investigated in this study, considers the integration of a reheating train (Design 2) which is used for increasing the specific expansion work, additionally using a high-temperature heater (E3B) and an expansion turbine (M1B). Another improvement option analyzed in this study is the integration of an intercooled compression train (Design 3) for minimizing the specific compression work requirement by splitting the main compressor into two sequential units (C1A, C1B) which are connected via the intercooler (E4). The last improvement option is the recompression option (Design 4) where the low-pressure stream exiting the recuperator is split into two streams bypassing the main compressor C1A using another compressor (C1C). Furthermore, this design requires the recuperator E2 to be split into a low-temperature and high-temperature thus enabling the transfer of a larger amount of specific heat in the recuperator for compensating the differences in $sCO_2$ properties.

For potentially achieving even higher efficiency $sCO_2$ power cycle designs, it is possible to further combine any improvement option with each other. However, such cycles exhibit an even higher complexity resulting in presumably more expensive designs.

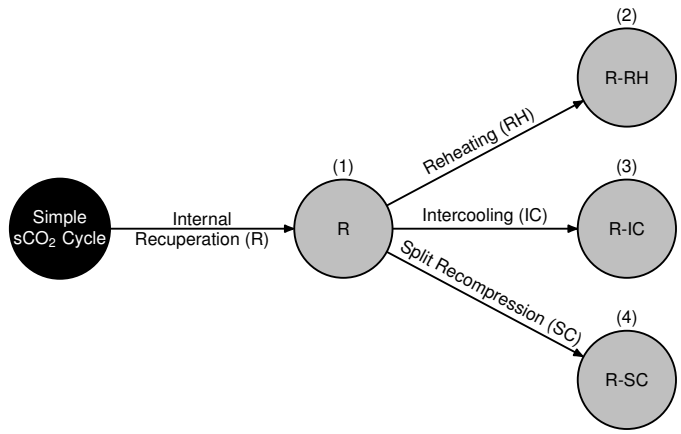


**Figure 1:** Hierarchical design of power cycles with different potential improvement options.

### Cycle Simulation and Design Parameters

The comparison and benchmarking of different technologies, designs and options for power generation requires the use of best-practice guidelines, representing heuristics, and already available process data for modeling and simulation purposes. For the present study, AspenPlus is used for modeling and simulation. The thermodynamic properties are obtained using REFPROP [27, 28].

The different $sCO_2$ power cycle designs (Figure 2) are modeled and simulated using potentially viable design parameters according to [29], and [30]. Based on the full set of parameters given in Table 1, the main characteristics of the cycles of the present study are a compressor inlet pressure of 75 bar and an inlet temperature of 32 °C. On the other hand, the turbine inlet is specified by a pressure of 250 bar and a temperature of 600 °C. The size of the recuperator is limited either by a maximum effectiveness of 0.9 or a maximum outlet temperature of 400 °C on the cold side whichever applies to the specific cycle design. For the supply and removal of heat, models of generic heat sources and sinks are used that differ by their inlet and outlet temperatures, respectively.

## METHODOLOGY

The present study employs conventional thermodynamic and economic methodologies for analyzing the different cycles. For conducting thermoeconomic analyses both methodologies are combined which enables the evaluation of each cycles' performance considering the general conflict between thermodynamic and economic performance.

### Thermodynamic Analysis

According to the general convention for quantifying the efficiency of single product power cycles, the overall thermodynamic efficiency $\eta$ is defined as the ratio of net power generated and heat supplied as fuel to the cycle [17].

$$\eta = \frac{\dot{W}_{\text{net}}}{\dot{Q}_{\text{F}}} \tag{1}$$

It is however important to notice that a suitable framework [31, 32] for benchmarking different power cycles is required,


DOI: 10.17185/duepublico/48909

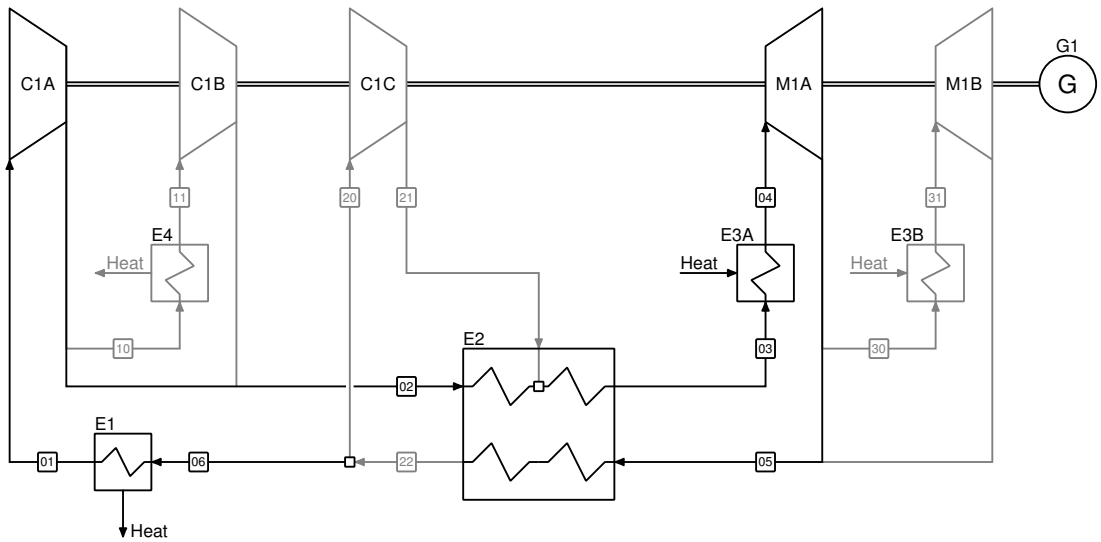


**Figure 2:** Flowsheet with superstructure showing all improvement options (in gray) of the simulated power cycles.

in particular regarding the site-specific environment conditions determining the heat sink temperature and characterizing the potential technology.

### Economic Analysis

The evaluation, comparison, and cost optimization [33] of any energy-conversion system requires the comparison of annually recurrent monetary values, being related to capital investment, fuel costs, and expenses for operation and maintenance. As each of these cost components can vary significantly within the system's economic life, levelized values are used in the evaluation for the sake of comparability.

In the literature, different methodologies [34, 35] are found, sometimes with significant differences. The present study uses the total revenue requirement method (TRR method) [33] which employs well-established procedures. Based on data for the total capital investment and proper assumptions regarding economic, financial, and operating parameters, the systems economic performance can be determined.

In case of $sCO_2$ power cycles, the determination of total capital investment based on capital cost estimation for the cycle equipment is lacking substantial data. Therefore, it is only possible to use some generalized baseline data and to scale the capital cost $C$ accordingly using a reference value, and a suitable cost attribute $X$, e.g., compressor and turbine power or heat exchanger area, and a scaling exponent $n$.

$$C = C_{\mathrm{ref}} \cdot \left(\frac{X}{X_{\mathrm{ref}}}\right)^n \tag{2}$$

In the literature, scaling exponents for different system components are available [33, 36]. Furthermore, in case of design studies, only capital cost data from prior estimates and systems is available which requires updating using cost indices [33].

Based on the total capital investment $TCI$, the expenses for fuel $FC$, and operation and maintenance $OMC$, it is possible to calculate the levelized total revenue requirement including factors for discounting ($CRF$) and escalation ($CELF$) using an appropriate interest rate $i_{\mathrm{eff}}$ and constant escalation rates $k$ during the system's economic life $a$.

$$TRR = CC_{\mathrm{L}} + FC_{\mathrm{L}} + OMC_{\mathrm{L}} \tag{3a}$$

$$CC_{\mathrm{L}} = CRF \cdot TCI = \frac{i_{\mathrm{eff}}\,(1+i_{\mathrm{eff}})^a}{(1+i_{\mathrm{eff}})^a - 1} TCI \tag{3b}$$

$$FC_{\mathrm{L}} = CELF \cdot FC_{\mathrm{ref}} = \frac{k_{\mathrm{FC}}\left(1 - k_{\mathrm{FC}}^a\right)}{(1 - k_{\mathrm{FC}})} CRF \cdot FC_{\mathrm{ref}} \tag{3c}$$

$$OMC_{\mathrm{L}} = CELF \cdot OMC_{\mathrm{ref}} \tag{3d}$$

$$= \frac{k_{\mathrm{OMC}}\left(1 - k_{\mathrm{OMC}}^a\right)}{(1 - k_{\mathrm{OMC}})} CRF \cdot OMC_{\mathrm{ref}} \tag{3e}$$

Based on the overall system's economic parameters, it is possible to associate each system component with a cost rate $\dot{Z}_k$ based on the system's annual time of full load operation $\tau$ and its share in capital investments $x_k$.

$$\dot{Z}_k = \dot{Z}_k^{\mathrm{CI}} + \dot{Z}_k^{\mathrm{OM}} \tag{4a}$$

$$\dot{Z}_k^{\mathrm{CI}} = x_k \cdot \frac{CC_{\mathrm{L}}}{\tau} \tag{4b}$$

$$\dot{Z}_k^{\mathrm{OM}} = x_k \cdot \frac{OMC_{\mathrm{L}}}{\tau} \tag{4c}$$

Employing the same considerations, it is also possible to quantify the cost rates for input streams with their respective cost rates $\dot{C}_{\mathrm{F}}$.

$$\dot{C}_{\mathrm{F}} = \frac{FC_{\mathrm{L}}}{\tau} \tag{5}$$

The levelized cost rates are suitable input data for conducting a thermoeconomic analysis on the system's component level.

### Thermoeconomic Analysis

For a conventional thermoeconomic analysis, the information provided by the economic analysis is used on the overall system


DOI: 10.17185/duepublico/48909

**Table 1:** Simulation parameters used for the analysis the $sCO_2$ power cycles based on literature data for benchmarking given by Weiland and Thimsen [29], and Crespi et al. [30].

| Unit ID | Parameter | Value |
|---|---|---|
| M1 A/B | Turbine Inlet Temperature | 600 °C |
| M1 A | Turbine Inlet Pressure | 250 bar |
| M1 A/B | Turbine Isentropic Efficiency | 90 % |
| M1 A/B | Turbine Mechanical Efficiency | 99 % |
| C1 A/B/C | Compressor Inlet Pressure | 75 bar |
| C1 A | Precompressor Inlet Pressure | 50 bar |
| C1 A/B/C | Compressor Isentropic Efficiency | 85 % |
| C1 A/B/C | Compressor Mechanical Efficiency | 99 % |
| G1 | Electric Generator Efficiency | 99 % |
| E1, E4 | Cooler Outlet Temperature | 32 °C |
| E1, E4 | Cooler Pressure Drop | 15 kPa |
| E2 | Maximum Recuperator Cold Side Outlet Temperature | 400 °C |
| E2 | Maximum Recuperator Effectiveness | 0.9 |
| E2 | Recuperator Hot-Side Pressure Drop | 280 kPa |
| E2 | Recuperator Cold-Side Pressure Drop | 140 kPa |
| E3 A/B | Primary Heat Exchanger Pressure Drop | 200 kPa |
| E3 A/B | Primary Heat Exchanger Minimum Temperature Difference | 50 K |

level to relate input streams representing fuels and auxiliary streams with output streams associated with useful products.

In the present study, cost rates associated with heat and power streams are expressed as the product of their thermodynamic quantities for heat $\dot{Q}$ and power $\dot{W}$, and their associated specific cost $c$ per unit of energy.

$$\dot{C}_{\mathrm{q}} = c_{\mathrm{q}} \cdot \dot{Q} \tag{6a}$$

$$\dot{C}_{\mathrm{w}} = c_{\mathrm{w}} \cdot \dot{W} \tag{6b}$$

Considering the operation of the overall system at steady state, the cost balance is used to relate input and output streams expressing the total cost of the output streams as the sum of the input streams and cost streams associated with the monetary expenses.

$$\sum_{i=1}^{n} \dot{C}_{i,\mathrm{out}} = \sum_{i=1}^{n} \dot{C}_{i,\mathrm{out}} + \sum_{k=1} \dot{Z}_k \tag{7}$$

Based on the operation of a $sCO_2$ power cycle, Equation (7) contains terms for monetary expenditures related to the different system components $\dot{Z}$, for the energy streams related to heat supplied $\dot{C}_{\mathrm{q},1}$ and heat removed $\dot{C}_{\mathrm{q},2}$, i.e, coolant cost, and the cost rate $\dot{C}_{\mathrm{w}}$ for the net power output.

$$\dot{C}_{\mathrm{w}} = \dot{Z} + \dot{C}_{\mathrm{q},1} + \dot{C}_{\mathrm{q},2} \tag{8}$$

Assuming that the coolant is available at negligible cost, Equation (8) can be simplified accordingly.

$$\dot{C}_{\mathrm{w}} = \dot{Z} + \dot{C}_{\mathrm{q},1} \tag{9}$$

By associating the cost rates of heat supply and net power output in terms of fuel and product, the cost of electricity of the $sCO_2$ power cycle is generally related to the monetary expenses and its operation costs.

$$\dot{C}_{\mathrm{P}} = \dot{Z} + \dot{C}_{\mathrm{F}} \tag{10}$$

By splitting the cost rates of the net power output and the heat supply into its constituent terms, the specific levelized cost of electricity $c_{\mathrm{w,P}}$ can be calculated [33].

$$c_{\mathrm{w,P}} = \frac{\dot{Z}}{\dot{W}_{\mathrm{net}}} + c_{\mathrm{q,F}} \frac{\dot{Q}_{\mathrm{F}}}{\dot{W}_{\mathrm{net}}} \tag{11}$$

Based on the presented common procedure for economic and thermoeconomic analyses, the economic analysis is particularly subject to a large amount of highly uncertain data. This involves the cost estimation of the different components as well as the financial project parameters. For the analysis of $sCO_2$ cycle designs this is even more important due to of the low technology readiness level and the highly experimental nature of such technology.

However, in order to compare different $sCO_2$ power cycle designs, it is possible to employ similitude theory [37] as all the different cycles share a significant amount of common features. By choosing a reference cycle design, the different thermoeconomic parameters are effectively put into relation to each other and can be easily compared. By introducing the operating and economic characteristics of the reference cycle design, Equation (11) can be rewritten as:

$$\dot{C}_{\mathrm{w,P}} \frac{\dot{C}_{\mathrm{w,P,ref}}}{\dot{C}_{\mathrm{w,P,ref}}} = \dot{Z} \frac{\dot{Z}_{\mathrm{ref}}}{\dot{Z}_{\mathrm{ref}}} + \dot{C}_{\mathrm{q,F}} \frac{\dot{C}_{\mathrm{q,F,ref}}}{\dot{C}_{\mathrm{q,F,ref}}} \tag{12}$$

By reordering and applying of Equation (10), the following relationship is obtained:

$$\frac{\dot{C}_{\mathrm{w,P}}}{\dot{C}_{\mathrm{w,P,ref}}} = \underbrace{\frac{\dot{Z}_{\mathrm{ref}}}{\dot{Z}_{\mathrm{ref}} + \dot{C}_{\mathrm{q,F,ref}}}}_{f} \frac{\dot{Z}}{\dot{Z}_{\mathrm{ref}}} + \underbrace{\frac{\dot{C}_{\mathrm{q,F,ref}}}{\dot{Z}_{\mathrm{ref}} + \dot{C}_{\mathrm{q,F,ref}}}}_{1-f} \frac{\dot{C}_{\mathrm{q,F}}}{\dot{C}_{\mathrm{q,F,ref}}} \tag{13}$$


DOI: 10.17185/duepublico/48909

The specific constants $f$ and $1-f$ quantify the contribution of carrying charges and fuel cost in case of the reference power cycle design, respectively. In addition, integration of Equations (6) into Equation (13) provides a direct relationship between the specific cost of electricity generated by the cycle, and its monetary expenses and fuel consumption.

$$\frac{c_{\mathrm{w,P}}\dot{W}_{\mathrm{net}}}{c_{\mathrm{w,P,ref}}\dot{W}_{\mathrm{net}}} = f\frac{\dot{Z}}{\dot{Z}_{\mathrm{ref}}} + (1-f)\frac{c_{\mathrm{q,F}}\dot{Q}_{\mathrm{F}}}{c_{\mathrm{q,F,ref}}\dot{Q}_{\mathrm{F,ref}}} \tag{14}$$

Finally, under the assumption that the net power output of each cycle is the same and that the specific cost of fuel are equal for all designs considered in this study as a first approximation, Equation (14) can be rewritten in terms of the power cycle efficiency $\eta$ using Equation (1).

$$\frac{c_{\mathrm{w,P}}}{c_{\mathrm{w,P,ref}}} = f\frac{\dot{Z}}{\dot{Z}_{\mathrm{ref}}} + (1-f)\frac{\eta_{\mathrm{ref}}}{\eta} \tag{15}$$

This equation finally shows the conflicting objective for thermoeconomic improvement of power generation technologies in terms of monetary expenses, cycle complexity, and thermodynamic efficiency. Compared to a conventional thermoeconomic analysis, the amount of inherent uncertainty is significantly reduced due to the considerable reduction in parameters.

As the scope of the current study is the evaluation of different $sCO_2$ power cycle designs incorporating general improvement options, it is convenient to further identify the contribution and change for each power cycle component. The cost rate $\dot{Z}$ of the overall power cycle is defined as the sum of the cost rates $\dot{Z}_k$ of each component $k$.

$$\dot{Z} = \sum_{i=1}^{n}\dot{Z}_k \tag{16}$$

In case of the different $sCO_2$ power cycles considered in this study, the following components are effectively considered as a single item for the cost estimation procedure based on the flowsheet shown in Figure 2.

- Cooler E1/4: E1, E4;
- Recuperator E2: E2;
- Heater E3: E3A, E3B;
- Compressor C1: C1A, C1B, C1C;
- Turbine M1: M1A, M1B;
- Generator G1: G1

Under the premise that the different cycle designs are compared using the same financial and economic parameters as discussed above, the cost rate of each component can be related to that of the reference cycle design.

$$\begin{aligned}\frac{\dot{Z}}{\dot{Z}_{\mathrm{ref}}} = {} & x_{\mathrm{E1/4,ref}}\frac{\dot{Z}_{\mathrm{E1/4}}}{\dot{Z}_{\mathrm{E1/4,ref}}} + x_{\mathrm{E2,ref}}\frac{\dot{Z}_{\mathrm{E2}}}{\dot{Z}_{\mathrm{E2,ref}}} + x_{\mathrm{E3,ref}}\frac{\dot{Z}_{\mathrm{E3}}}{\dot{Z}_{\mathrm{E3,ref}}} \\ & + x_{\mathrm{C1,ref}}\frac{\dot{Z}_{\mathrm{C1}}}{\dot{Z}_{\mathrm{C1,ref}}} + x_{\mathrm{M1,ref}}\frac{\dot{Z}_{\mathrm{M1}}}{\dot{Z}_{\mathrm{M1,ref}}} + x_{\mathrm{G1,ref}}\frac{\dot{Z}_{\mathrm{G1}}}{\dot{Z}_{\mathrm{G1,ref}}}\end{aligned} \tag{17}$$

Equation (17) thereby reduces to a form that allows for evaluation by using Equation (2) for each component. Therefore it is possible to account for different component designs and changes in cycle parameters in terms of cost ratios and adjusted degression exponents. Assuming that the design of the different components does not change significantly, the cost estimation relationships are established using the heat transfer capacity $UA$ for heat exchangers, and the power $\dot{W}$ for compressors, turbines and generators.

$$\begin{aligned}\frac{\dot{Z}}{\dot{Z}_{\mathrm{ref}}} = {} & x_{\mathrm{E1/4,ref}}\left(\frac{UA_{\mathrm{E1/4}}}{UA_{\mathrm{E1/4,ref}}}\right)^{n_{\mathrm{E1/4}}} + x_{\mathrm{E2,ref}}\left(\frac{UA_{\mathrm{E2}}}{UA_{\mathrm{E2,ref}}}\right)^{n_{\mathrm{E2}}} \\ & + x_{\mathrm{E3,ref}}\left(\frac{UA_{\mathrm{E3}}}{UA_{\mathrm{E3,ref}}}\right)^{n_{\mathrm{E3}}} + x_{\mathrm{C1,ref}}\left(\frac{\dot{W}_{\mathrm{C1}}}{\dot{W}_{\mathrm{C1,ref}}}\right)^{n_{\mathrm{C1}}} \\ & + x_{\mathrm{M1,ref}}\left(\frac{\dot{W}_{\mathrm{M1}}}{\dot{W}_{\mathrm{M1,ref}}}\right)^{n_{\mathrm{M1}}} + x_{\mathrm{G1,ref}}\left(\frac{\dot{W}_{\mathrm{G1}}}{\dot{W}_{\mathrm{G1,ref}}}\right)^{n_{\mathrm{G1}}}\end{aligned} \tag{18}$$

The degression exponents $n_k$ used for cost estimation, and the share in cycle cost $x_k$ of each cycle component are estimated using the baseline data given in Carlson et al. [20]. In case no absolute value for the reference system's cost is available, the share in cycle costs $x_k$ for each component can be determined based on heuristics or estimated based on experience.

For the following analyses, Equations (15) and (18) can be used conveniently to evaluate the different $sCO_2$ power cycle designs considered in this study regarding their potential to provide an economically advantageous design.

## RESULTS

For the thermodynamic and thermoeconomic study for comparing the different $sCO_2$ power cycle designs and improvement options, the following analyses are conducted for a reference cycle with a net power output of 100 MW.

### Results of the Thermodynamic Analyses

The results of the simulations of the different $sCO_2$ power cycle designs are given in Table 2. The cycle designs differ significantly in massflow rates of the $sCO_2$ working fluid and operating temperatures of the recuperator, whereas the pressures are similar.

The simulation results concerning the main heat transfer equipment, compression and expansion equipment, and thermodynamic efficiency of the different cycles are presented in Table 3. The highest efficiency with 41.56 % is obtained for the recompression cycle design (4). The second highest efficiency is obtained for the intercooled cycle design (3) with an overall cycle efficiency of 36.87 %, and cycle design (2) with the reheating improvement option ranks third with an efficiency of 36.02 %. Finally, the simple recuperated cycle design (1), with an efficiency of 35.67 %, is the least efficient one. It is shown that each improvement option considered for this study indeed improves the thermodynamic efficiency of an $sCO_2$ power under the given parameterization.

Furthermore, it is interesting to notice that the different cycle parameters vary considerably with regard to the different improvement options. It can be seen in Table 3 that the largest amount of compression and expansion power is found for the intercooled cycle design (3) and recompression cycle design (4). Moreover, the amount of heat removed from the cycle is the smallest in case of the recompression cycle design (4). In contrast, the same cycle design also exhibits a significantly larger amount of heat transferred in the recuperator being comparable to the reheating


DOI: 10.17185/duepublico/48909

**Table 2:** Stream parameters of the different cycle simulations with a specified net power output of 100 MW

**(a)** Design (1): Simple Recuperated Cycle

| Stream-No. | Temperature (°C) | Pressure (bar) | Massflow (kg/s) |
|---|---|---|---|
| 1 | 32.00 | 75.00 | 864.1 |
| 2 | 100.13 | 253.40 | 864.1 |
| 3 | 341.02 | 252.00 | 864.1 |
| 4 | 600.00 | 250.00 | 864.1 |
| 5 | 457.14 | 77.95 | 864.1 |
| 6 | 135.83 | 75.15 | 864.1 |

**(b)** Design (2): Reheating Cycle

| Stream-No. | Temperature (°C) | Pressure (bar) | Massflow (kg/s) |
|---|---|---|---|
| 1 | 32.00 | 75.00 | 818.4 |
| 2 | 100.13 | 253.40 | 818.4 |
| 3 | 400.00 | 252.00 | 818.4 |
| 4 | 600.00 | 250.00 | 818.4 |
| 5 | 526.43 | 77.95 | 818.4 |
| 6 | 142.76 | 75.15 | 818.4 |
| 30 | 527.74 | 142.32 | 818.4 |
| 31 | 600.00 | 140.32 | 818.4 |

**(c)** Design (3): Intercooled Compression Cycle

| Stream-No. | Temperature (°C) | Pressure (bar) | Massflow (kg/s) |
|---|---|---|---|
| 1 | 32.00 | 50.00 | 716.3 |
| 2 | 100.13 | 253.40 | 716.3 |
| 3 | 298.46 | 252.00 | 716.3 |
| 4 | 600.00 | 250.00 | 716.3 |
| 5 | 415.13 | 52.95 | 716.3 |
| 6 | 131.63 | 50.15 | 716.3 |
| 10 | 66.25 | 75.15 | 716.3 |
| 11 | 32.00 | 75.00 | 716.3 |

**(d)** Design (4): Recompression Cycle

| Stream-No. | Temperature (°C) | Pressure (bar) | Massflow (kg/s) |
|---|---|---|---|
| 1 | 32.00 | 75.00 | 777.4 |
| 2 | 100.13 | 253.40 | 777.4 |
| 3 | 400.00 | 252.00 | 960.8 |
| 4 | 600.00 | 250.00 | 960.8 |
| 5 | 457.14 | 77.95 | 960.8 |
| 6 | 112.25 | 75.15 | 777.4 |
| 20 | 112.25 | 75.15 | 183.5 |
| 21 | 242.13 | 252.70 | 183.5 |
| 22 | 112.25 | 75.15 | 960.8 |

**Table 3:** Main results of the reference case simulations with a specified net power out of 100 MW.

| Cycle-Design | $\dot{Q}_{E1/4}$ (MW) | $\dot{Q}_{E2}$ (MW) | $\dot{Q}_{E3}$ (MW) | $\dot{W}_{C1}$ (MW) | $\dot{W}_{M1}$ (MW) | $\dot{W}_{G1}$ (MW) | $\eta$ (–) |
|---|---|---|---|---|---|---|---|
| (1) | 177.58 | 316.82 | 280.34 | 36.14 | 137.15 | 100 | 35.67 |
| (2) | 174.87 | 360.63 | 277.59 | 34.23 | 135.24 | 100 | 36.02 |
| (3) | 168.33 | 223.78 | 271.26 | 44.91 | 145.92 | 100 | 36.87 |
| (4) | 137.52 | 379.76 | 240.59 | 51.49 | 152.50 | 100 | 41.56 |

cycle design (2). In case of the intercooled compression cycle design (3), the heat transferred in the recuperator is considerably smaller compared to the other designs.

Based on this observation, it is concluded that at higher turbine outlet temperatures, as in case of the reheating and recompression designs (2,4), the amount of heat transferred in the recuperator is significantly increased in order to achieve high cycle efficiencies. In contrast, the amount of heat transferred in the intercooled cycle design (3) is significantly smaller based on the potential for reduced turbine outlet pressures and temperature. Based on these findings, the operating parameters of the recuperator are thus considered the most important feature for an $sCO_2$ power cycle design.

**Results of the Thermoeconomic Analyses**

Thermoeconomic analyses are conducted in order to identify the economic feasibility of each cycle design.

A major advantage of the methodology used for the thermoeconomic analysis is the possibility to determine the maximum allowable ratio of monetary expenses for each cycle design in comparison to the reference cycle design (1) for obtaining equal specific cost of electricity. The results are shown in Figure 3. Based the characteristics of each design, it can be concluded that in case the thermoeconomic factor approaches unity, the specific cost of heat become negligible, and the ratio of the cost rates of the different cycle becomes unity representing the theoretical limiting case. On the other hand, the characteristics for smaller thermoeconomic factors, correctly allows for the identification of the well-known conflict between higher thermodynamic efficiencies and increased capital investment. Whereas the difference in cost rates between the reference case and the reheating and intercooling cycle designs (2, 3) is generally small, the difference is generally larger in case of the recompression cycle design (4).

Based on the available general relationship between thermodynamic efficiency and monetary expenditures, the detailed thermoeconomic analyses for the 100 MW $sCO_2$ power cycle designs are conducted. The results are presented in Table 4. Based on the calculation of the design parameters for each cycle component


DOI: 10.17185/duepublico/48909

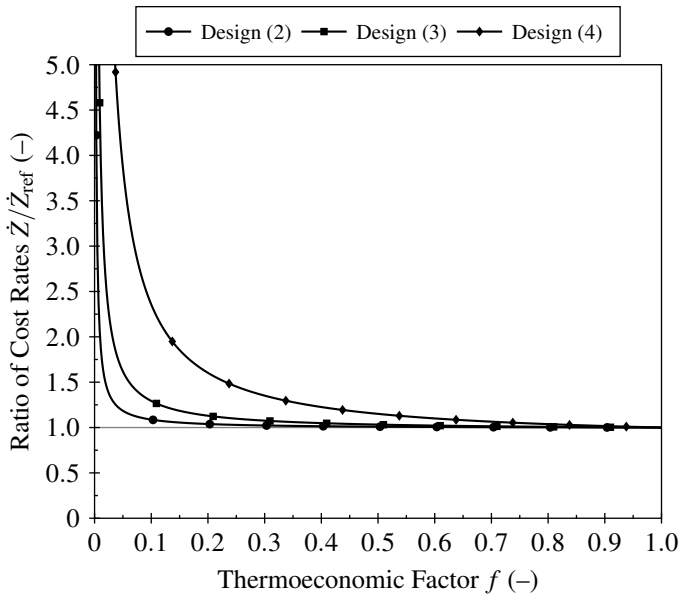


**Figure 3:** Isolines determining the maximum ratio of cost rates $\dot{Z}/\dot{Z}_{ref}$ for the overall cycle design resulting in the same specific cost of electricity $c_{w,P}/c_{w,P,ref} = 1$ as for the reference design (1).

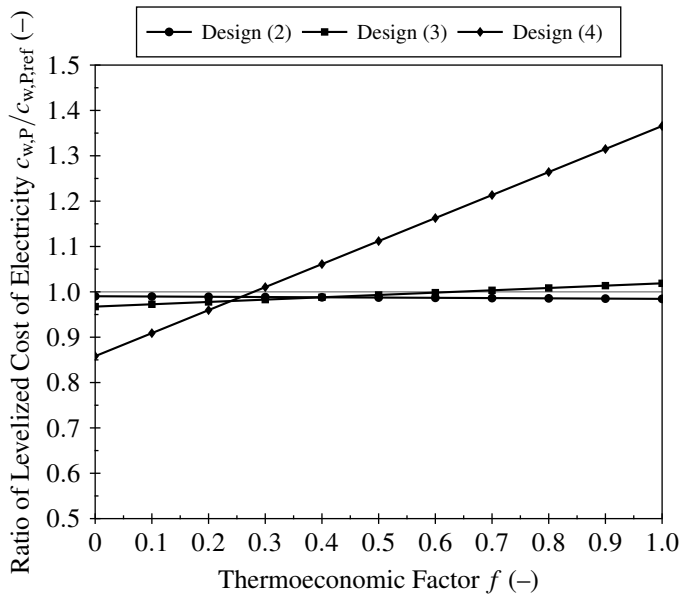


**Figure 4:** Actual ratio of levelized cost of electricity for the $sCO_2$ power cycle designs considered in this study.

determining its size and cost, the economic scaling laws using a suitable degression coefficient are applied, and the resulting ratio of each cycle design's actual cycle cost rate in comparison to the reference cycle cost rate is determined.

It is shown in Table 4 that the cost rate ratios for the reheating and intercooling design (2,3) are comparable. In contrast, the same ratio is much higher in case of the recompression design (4). Based on the determined cost distribution for each cycle, it can be seen that the main cost drivers are the recuperator, compressor and turbine component costs. The share in overall cycle cost is significantly larger for the recuperator in case of the recompression cycle compared to the reference case. The same results are found for the compression and turbine components. In case of the intercooling compression cycle design (3), the cost share of the recuperator is significantly smaller compared to the reference case, whereas the compression and turbine components become more important. Considering the results of the reheating cycle design (2), it is concluded that the cost shares are basically the same as for the reference cycle design (1).

Based the ratio of cost rates determined for the different cycle designs, it is possible to identify the actual ratio of the levelized cost of electricity for each power cycle design. The results are shown in Figure 4. It is seen that the reheating cycle design (2) provides a small general benefit over the full range of the thermoeconomic factor. In contrast, the ratio of levelized cost of electricity for the intercooling compression cycle design (3) is larger than unity for thermoeconomic factors larger than 0.6 and becomes favorable for thermoeconomic factors smaller than 0.6, obtaining an even smaller ratio than the reheating cycle design for thermoeconomic factors smaller than 0.4. In case of the recompression cycle design (4), favorable results are only obtained for thermoeconomic factors smaller than 0.25.

The results of this study can be explained mostly by the scaling relations for estimating each component cost. Due to the unfavorable degression exponents for the heat exchanger components, a significant increase in heat exchange capacity *UA* is highly detrimental for the cycles economic performance. This can only be compensated by the increased efficiency in case of very expensive heat generation technologies and fuels. On the other hand, with more favorable degression exponents, an increase in compression and expansion equipment can be economically justified if significantly higher efficiencies can be realized.

## CONCLUSIONS

Supercritical $CO_2$ power cycles have a high potential for substituting conventional technologies for power generation. However, as economic data is still limited and highly uncertain, a new approach for the thermoeconomic evaluation of $sCO_2$ power cycle design has been introduced and applied for comparing the economic viability of a simple recuperated cycle design and three different options for improving the cycle efficiency. The approach presented in this study has significantly reduced the number of parameters required for the evaluation of the different cycle designs.

The results for a particular system study, using a benchmarking parameterization, have shown that an increase in heat exchanger capacity is economically not justified because of an unfavorable cost degression in case of the heat exchangers. On the other hand, larger compressor and turbine components can be economically justified if a higher efficiency is realized. Furthermore, it has been shown that the economic viability of a $sCO_2$ cycle design generally depends on the specific technology that is used for heat supply.

Based on the promising simplicity of the new approach, a


DOI: 10.17185/duepublico/48909

**Table 4:** Thermoeconomic results of the simulations with a specified net power output of 100 MW.

| Design Parameter | $n$ (–) | $x_k$ (–) | Design (1) Parameter (kW/K; MW) | Design (1) $\dot{Z}/\dot{Z}_{ref}$ (–) | Design (2) Parameter (kW/K; MW) | Design (2) $\dot{Z}/\dot{Z}_{ref}$ (–) | Design (3) Parameter (kW/K; MW) | Design (3) $\dot{Z}/\dot{Z}_{ref}$ (–) | Design (4) Parameter (kW/K; MW) | Design (4) $\dot{Z}/\dot{Z}_{ref}$ (–) |
|---|---|---|---|---|---|---|---|---|---|---|
| $UA_{E1/4}$ | 0.9500 | 0.045 | 3354.1 | 0.05 | 3184.4 | 0.04 | 4299.0 | 0.06 | 2988.8 | 0.04 |
| $UA_{E2}$ | 0.9500 | 0.180 | 4646.5 | 0.18 | 4678.5 | 0.18 | 3440.4 | 0.14 | 11981.8 | 0.44 |
| $UA_{E3}$ | 1.0000 | 0.180 | 5606.8 | 0.18 | 5551.8 | 0.18 | 5425.2 | 0.17 | 4811.8 | 0.15 |
| $\dot{W}_{C1}$ | 0.7865 | 0.270 | 36.1 | 0.27 | 34.2 | 0.26 | 44.9 | 0.32 | 51.5 | 0.36 |
| $\dot{W}_{M1}$ | 0.6842 | 0.225 | 137.1 | 0.23 | 135.2 | 0.22 | 145.9 | 0.23 | 152.5 | 0.24 |
| $\dot{W}_{G1}$ | 1.0000 | 0.100 | 100.0 | 0.10 | 100.0 | 0.10 | 100.0 | 0.10 | 100.0 | 0.10 |
| Cycle | | 1.000 | | 1.00 | | 0.98 | | 1.02 | | 1.34 |

larger set of $sCO_2$ power cycle designs will be investigated in the future considering actual technologies for heat generation. In combination with sensitivity and optimization studies on the cycle parameters, the suggested approach is able to provide a systematic and robust basis for the design of $sCO_2$ power cycles. Moreover, the integration with an exergoeconomic analysis is going to provide even more significant results by revealing the actual cost formation process within each power cycle.

## NOMENCLATURE

| | |
|---|---|
| $C$ | Cost ($) |
| $\dot{C}$ | Cost rate ($/s) |
| $\dot{W}$ | Power (MW) |
| $\dot{Q}$ | Heat stream (MW) |
| $UA$ | Heat transfer capacity (kW/K) |
| $\dot{Z}$ | Cost rate ($/s) |
| $c$ | Specific costs ($/kJ) |
| $f$ | Thermoeconomic factor (–) |
| $n$ | Degression coefficient (–) |
| $x$ | Fraction (–) |

*Superscripts and subscripts*

| | |
|---|---|
| CI | Capital investment |
| F | Fuel |
| L | Levelized |
| OM | Operation and maintenance |
| P | Product |
| $k$ | Component |
| ref | Reference |
| q | Heat |
| w | Power |

## REFERENCES


[1] Brun, K., Friedman, P. and Dennis, R., (eds.) *Fundamentals and Applications of Supercritical Carbon Dioxide ($sCO_2$) Based Power Cycles*. Woodhead Publishing (2017).

[2] Zhu, Q. "High-efficiency Power Generation – Review of Alternative Systems." Technical Report No. CCC/247, International Energy Agency (IEA). 2015.

[3] Brewer, J. and Shelton, W. "Supercritical $CO_2$ Power Cycles – Literature Survey." Technical report no., U.S. Department of Energy. 2012.

[4] Le Moullec, Y. "Conceptual Study of a High Efficiency Coal-fired Power Plant with $CO_2$ Capture Using a Supercritical $CO_2$ Brayton Cycle." *Energy* Vol. 49 (2013): pp. 32–46. DOI: 10.1016/j.energy.2012.10.022.

[5] Mecheri, M. and Le Moullec, Y. "Supercritical $CO_2$ Brayton cycles for coal-fired power plants." *Energy* Vol. 103 (2016): pp. 758–771. DOI: 10.1016/j.energy.2016.02.111.

[6] Weiland, N. T. and White, C. W. "Techno-Economic Analysis of an Integrated Gasification Direct-Fired Supercritical $CO_2$ Power Cycle." *Fuel* Vol. 212 (2018): pp. 613–625. DOI: 10.1016/j.fuel.2017.10.022.

[7] Ahn, Y., Bae, S. J., Kim, M., Cho, S. K., Baik, S., Lee, J. I. and Cha, J. E. "Review of Supercritical $CO_2$ Power Cycle Technology and Current Status of Research and Development." *Nuclear Engineering and Technology* Vol. 47, No. 6 (2015): pp. 647–661. DOI: 10.1016/j.net.2015.06.009.

[8] Dostal, V., Hejzlar, P. and Driscoll, M. J. "High-Performance Supercritical Carbon Dioxide Cycle for Next-Generation Nuclear Reactors." *Nuclear Technology* Vol. 154, No. 3 (2006): pp. 265–282. DOI: 10.13182/nt154-265.

[9] Dostal, V., Hejzlar, P. and Driscoll, M. J. "The Supercritical Carbon Dioxide Power Cycle: Comparison to Other Advanced Power Cycles." *Nuclear Technology* Vol. 154, No. 3 (2006): pp. 283–301. DOI: 10.13182/nt06-a3734.

[10] Garg, P., Kumar, P. and Srinivasan, K. "Supercritical Carbon Dioxide Brayton Cycle for Concentrated Solar Power." *The Journal of Supercritical Fluids* Vol. 76 (2013): pp. 54–60. DOI: 10.1016/j.supflu.2013.01.010.

[11] Turchi, C. S., Ma, Z., Neises, T. W. and Wagner, M. J. "Thermodynamic Study of Advanced Supercritical Carbon Dioxide Power Cycles for Concentrating Solar Power Systems." *Journal of Solar Energy Engineering* Vol. 135, No. 4 (2013): p. 041007. DOI: 10.1115/1.4024030.

[12] Iverson, B. D., Conboy, T. M., Pasch, J. J. and Kruizenga, A. M. "Supercritical $CO_2$ Brayton Cycles for Solar-Thermal Energy." *Applied Energy* Vol. 111 (2013): pp. 957–970. DOI: 10.1016/j.apenergy.2013.06.020.

[13] Binotti, M., Astolfi, M., Campanari, S., Manzolini, G. and Silva, P. "Preliminary Assessment of $sCO_2$ Cycles for Power Generation in CSP Solar Tower Plants." *Applied Energy* Vol. 204 (2017): pp. 1007–1017. DOI: 10.1016/j.apenergy.2017.05.121.

[14] Chen, H., Goswami, D. Y. and Stefanakos, E. K. "A Review of Thermodynamic Cycles and Working Fluids for the Conversion of Low-grade Heat." *Renewable and Sustainable*



DOI: 10.17185/duepublico/48909

*Energy Reviews* Vol. 14, No. 9 (2010): pp. 3059–3067. DOI: 10.1016/j.rser.2010.07.006.

[15] Huck, P., Freund, S., Lehar, M. and Peter, M. "Performance Comparison of Supercritical $CO_2$ Versus Steam Bottoming Cycles for Gas Turbine Combined Cycle Applications." *Proceedings of the 5th International Symposium – Supercritical $CO_2$ Power Cycles*. 2016.

[16] Wright, S. A., Davidson, C. S. and Scammell, W. O. "Thermo-Economic Analysis of Four $sCO_2$ Waste Heat Recovery Power Systems." *Proceedings of the 5th International Symposium – Supercritical $CO_2$ Power Cycles*. 2016.

[17] Haywood, R. W. *Analysis of Engineering Cycles – Power, Refrigerating and Gas Liquefction Plant*, 4th ed. Pergamon Press (1991). DOI: 10.1016/B978-0-08-040738-8.50002-5.

[18] Crespi, F., Gavagnin, G., Sánchez, D. and Martínez, G. S. "Supercritical Carbon Dioxide Cycles for Power Generation: A Review." *Applied Energy* Vol. 195 (2017): pp. 152–183. DOI: 10.1016/j.apenergy.2017.02.048.

[19] Ho, C. K., Carlson, M. D., Garg, P. and Kumar, P. "Technoeconomic Analysis of Alternative Solarized s-$CO_2$ Brayton Cycle Configurations." *Journal of Solar Energy Engineering* Vol. 138, No. 5 (2016): p. 051008. DOI: 10.1115/1.4033573.

[20] Carlson, M. D., Middleton, B. M. and Ho, C. K. "Techno-economic Comparison of Solar-driven $sCO_2$ Brayton Cycles Using Component Cost Models Baselined with Vendor Data and Estimates." *Proceedings of the ASME 2017 – 11th International Conference on Energy Sustainability*. ES2017-3590: p. V001T05A009. 2017. DOI: 10.1115/es2017-3590.

[21] Gokhshtein, D. P. "The Problem of Increasing the Efficiency and Power of Gas-Turbine Power Plants." *Thermal Engineering* Vol. 7, No. 12 (1960): pp. 33–38.

[22] Dechtjarow, W. L. "Über Leistung und Wirkungsgrad bei $CO_2$-Dampfkraftanlagen." *Archiv für Energiewirtschaft* Vol. 15, No. 20 (1962): pp. 809–819.

[23] Gokhshtein, D. P., Dekhtyarev, V. L. and Kozorez, A. I. "Future Designs of Thermal Power Stations Operating on Carbon Dioxide." *Thermal Engineering* Vol. 18, No. 4 (1971): pp. 36–38.

[24] Angelino, G. "Perspectives for the Liquid Phase Compression Gas Turbine." *Journal of Engineering for Gas Turbines and Power* Vol. 89, No. 2 (1967): pp. 229–237. DOI: 10.1115/1.3616657.

[25] Angelino, G. "Carbon Dioxide Condensation Cycles for Power Production." *Journal of Engineering for Gas Turbines and Power* Vol. 90, No. 3 (1968): pp. 287–295. DOI: 10.1115/1.3609190.

[26] Feher, E. G. "The Supercritical Thermodynamic Power Cycle." *Energy Conversion* Vol. 8, No. 2 (1968): pp. 85–90. DOI: 10.1016/0013-7480(68)90105-8.

[27] Lemmon, E. W., Huber, M. L. and McLinden, M. O. "NIST Reference Fluid Thermodynamic and Transport Properties – REFPROP." Technical Report No. NIST Standard Reference Database 23, U.S. Department of Commerce. 2013.

[28] White, C. W. and Weiland, N. T. "Evaluation of Property Methods for Modeling Direct-Supercritical $CO_2$ Power Cycles." *Journal of Engineering for Gas Turbines and Power* Vol. 140, No. 1 (2017): p. 011701. DOI: 10.1115/1.4037665.

[29] Weiland, N. and Thimsen, D. "A Practical Look at Assumptions and Constraints for Steady State Modeling of $sCO_2$ Brayton Power Cycles." *Proceedings of the 5th International Symposium – Supercritical $CO_2$ Power Cycles*. 2016.

[30] Crespi, F., Gavagnin, G., Sánchez, D. and Martínez, G. S. "Analysis of the Thermodynamic Potential of Supercritical Carbon Dioxide Cycles: A Systematic Approach." *Journal of Engineering for Gas Turbines and Power* Vol. 140, No. 5 (2017): p. 051701. DOI: 10.1115/1.4038125.

[31] Jordal, K. "Benchmarking of Power Cycles with $CO_2$ Capture – The Impact of the Selected Framework." *International Journal of Greenhouse Gas Control* Vol. 2, No. 4 (2008): pp. 468–477. DOI: 10.1016/j.ijggc.2008.04.009.

[32] Chou, V. H., Kearney, D., Turner, M. J., Woods, M. C., Zoelle, A. and Black, J. B. "Quality Guidelines for Energy System Studies: Process Modeling Design Parameters." Technical Report No. DOE/NETL-341/051314, U.S. Department of Energy. 2014.

[33] Bejan, A., Tsatsaronis, G. and Moran, M. J. *Thermal Design and Optimization*. Wiley (1996).

[34] Rubin, E. S., Booras, G., Davison, J., Ekstrom, C., Matuszewski, M., McCoy, S. and Short, C. "Toward a Common Method of Cost Estimation for $CO_2$ Capture and Storage at Fossil Fuel Power Plants." Technical report no., Electric Power Research Institute (EPRI). 2013.

[35] Zoelle, A., Turner, M. J., Chou, V. H. and Fisher, J. C. "Quality Guidelines for Energy System Studies: Performing a Techno-Economic Analysis for Power Generation Plants." Technical Report No. DOE/NETL-341/020915, U.S. Department of Energy. 2015.

[36] Turner, M. J., Pinkerton, L. L. and Black, J. B. "Quality Guidelines for Energy System Studies: Capital Cost Scaling Methodology." Technical Report No. DOE/NETL-314/013113, U.S. Department of Energy. 2013.

[37] Kline, S. J. *Similitude and Approximation Theory*. Springer (1986). DOI: 10.1007/978-3-642-61638-9.



DOI: 10.17185/duepublico/48909

**DOI:** 10.17185/duepublico/48909
**URN:** urn:nbn:de:hbz:464-20191004-152426-9