3rd European supercritical CO2 Conference
September 19-20, 2019, Paris, France

2019-sCO2.eu-120

SHOUHANG-EDF 10MWE SUPERCRITICAL CO_2 CYCLE + CSP DEMONSTRATION PROJECT

Yann Le Moullec
EDF R&D China
Beijing, China

Jinyi Zhang*
EDF R&D China
Beijing, China
Email: Jinyi.zhang@edf.fr

Zijiang Yang
EDF R&D China
Beijing, China

Wenlong Chen
Shouhang IHW
Beijing, China

Zhipeng Qi
Shouhang IHW
Beijing, China

Pan Zhou
EDF R&D China
Beijing, China

Xihua Wang
Shouhang IHW
Beijing, China

Shuai Wang
Shouhang IHW
Beijing, China

ABSTRACT

Supercritical CO_2 power cycle, due to its potential to reach high thermal efficiency and high flexibility, is a promising approach to increase the competitiveness of concentrated solar power. Shouhang and EDF signed a collaboration contract in May 2018, with the objective to retrofit Shouhang's 10MWe concentrated solar power plant with a 10MWe supercritical CO_2 power cycle before the end of 2020. As the first industrial scale application of supercritical CO_2 cycle on solar thermal power plant in the world, this project aims to demonstrate several key technical aspects, including optimal cycle design for concentrated solar power, equipment design and operation, system operation and control. In addition to all the technical aspects related to supercritical CO_2 cycle, high-temperature molten salt and cold storage are also novel concepts to be investigated during this project. The 10MWe supercritical CO_2 cycle to be demonstrated is designed to work with the current existing solar field and thermal storage field. As a good compromise of demonstration interest for future commercial project, salt utilization, cost, complexity and efficiency, recompression cycle with intercooling and preheating is selected. In this paper, project concept and system design are presented, as well as the recent progress. Technical considerations on overall selection of technology path, equipment and system design, especially the problem related to the integration of SCO_2 cycle with CSP, are also addressed.

INTRODUCTION

In recent years, facing the worldwide environmental challenge and the scarcity of fossil fuels in some regions of the world, renewable energy is gaining more and more importance in the development portfolio of energy industry. Solar and wind energy are two major renewable energy solutions which attract most of the attention, however, the highly uncontrollable variability of solar irradiation and wind brings huge challenges for the electric power grid to match the instantaneous energy demand and production. As a result, the renewables are suffering serious curtailment, e.g. in 2016, the curtailment of wind and solar PV energy reached 57.3TWh in China [1]. In addition, the highly uncontrollable variability of solar irradiation and wind also limits the highest share of renewable energy that can be integrated into the power system in the future. Concentrated solar power (CSP), which can reach a high solar energy utilization efficiency and operate with low-cost thermal energy storage (TES), e.g. the commercially utilized solar molten salt (60 wt% $NaNO_3$ and 40 wt% KNO_3), is a grid-friendly renewable solution. Because CSP, if equipped with enough TES, is able to completely decouple the solar-thermal and thermal-electricity conversions, then achieving continuous production and regulating the power output depending on the grid demand, regardless of the weather conditions.

However, CSP's high cost, 120$\$_{2016}$/MWh in average in 2020 reported by IRENA, makes it difficult for long-term

* corresponding author(s)

DOI: 10.17185/duepublico/48884

deployment. In order to increase its competitiveness compared to other renewable solutions with storage, i.e. photovoltaic with battery, in addition to the efforts done to reduce the capital cost, there are two main technology development paths: one is to increase the solar-thermal efficiency by optimizing solar collector efficiency, the other is to increase the thermal-electricity efficiency by increasing the thermal storage temperature or power generation cycle efficiency. Supercritical CO_2 (SCO_2) power generation cycle is identified as a promising technology with high potential in the second path to increase the overall thermal-electric efficiency and reduce the capital cost due to simpler layout, more compact turbo-machinery and possibly higher flexibility during startup and shutdown [2–6].

Besides, CO_2 also exhibits many attracting characteristics as a heat transfer fluid [8–10]: it is abundant, inexpensive, non-toxic and less corrosive compared to water at the same high temperature with easily-achievable critical point (30.98 ℃, 7.38 MPa). It shows also a good thermal stability up to 1500 ℃ and no freezing problem down to -55 ℃. Gas Brayton cycle operating with SCO_2 benefits from the real gas behavior of CO_2 in the vicinity of the Andrews curve, which leads to the reduction of specific volume and therefore of the compression work in the cycle. More reduction of compression work is achieved when CO_2 is compressed closer to its critical point, as the fluid becomes more incompressible. This mechanical effect, i.e. the significant reduction of compression work, results in a significant thermal efficiency improvement of SCO_2 Brayton cycle compared to other working fluid for Brayton cycle, e.g. helium or air [7]. Compared to Helium Brayton cycle, SCO_2 cycle needs a much lower turbine inlet temperature to achieve the same efficiency [7], which brings less challenge for the heat sources, especially for CSP. As the SCO_2 cycle operates with high pressure and small pressure ratio, the fluid remains dense throughout the entire system, as a result, the volume of turbo-machineries is significantly reduced (Without considering the giant condenser after the water steam turbine, the volume of the SCO_2 turbine designed for this 10MWe project is only ~6% of that of the currently onsite 10MWe water steam turbine.). Replacing water by CO_2 in the power block also simplifies significantly the operation of CSP plants which are mostly located in the droughty areas.

Due to its potential to reach high efficiency and high flexibility with compactness and simplicity, in recent years, there are more and more efforts from academies and industries, with the support of government funding, to build test facilities from kW-scale to MW-scale, in order to better understand the system, investigate possible technical problems and discover feasible solutions to deal with the underlying challenges. Here is a summary of important projects which already built a test facility or is building one: (1) In 2010, Bettis Atomic Power Laboratory and Knolls Atomic Power Laboratory, under the support of Naval Reactor Program, completed the installation of a 100kWe / 300 ℃ / 16.5MPa simple recuperated closed-loop SCO_2 cycle with a two shaft design: a turbine driven compressor and a turbine driven generator [11–13]; (2) In 2012, Sandia National Lab completed the installation of a 250kWe / 540 ℃ / 13.5MPa SCO_2 closed-loop recompression cycle with two turbo-alternator-compressors, one gas chiller of type printed circuit heat exchanger (PCHE), two recuperator of type printed circuit heat exchanger and six heater of type shell and tube heat exchanger [14]; (3) In 2012, Southwest Research Institute , with the support of Sunshot Program and its industrial partners, launched a SCO_2 project to design a high temperature and high efficiency SCO_2 turbine and to build a 1MWe test loop to test the turbine at off-design conditions, i.e. at 1MWe scale. The high-temperature testing of turbine at reduced flow has been finished recently[15,16]. (4) In 2015, Nuclear Power Institute of China (NPIC) started the design and construction of 1MWe SCO_2 simple recuperated test loop [17]. (5) In 2016, Xi'an Thermal Power Research Institute (TPRI) started the design and construction of a natural gas fired 5MWe / 600 ℃ / 20MPa SCO_2 recompression cycle with preheating and reheating [18,19].

Table 1
Key design parameters of Shouhang Dunhuang 10MWe CSP plant

Parameters	Value
Location	Dunhuang, Gansu, China
Design net power (MWe)	10
Annual power generation (GWh)[Year 2017]	10.67
Thermal storage hour (h)	15
Storage medium	Solar Salt
Molten salt amount (ton)	5800
Design max. MS temperature (℃)	565
Design min. MS temperature (℃)	290
Tower height (m)	138
Heliostat amount (#)	1525
Heliostat surface (m^2)	115.5
Total reflective surface (m^2)	176138
Cooler	Air cooler

Figure 1. Shouhang Dunhuang 10MWe CSP plant

With all the research done before by the academies and industries, Shouhang and EDF, in May 2018, signed a collaboration contract to retrofit Shouhang's 10MWe CSP plant with a SCO_2 power cycle, in order to push its technical readiness to a higher level, then to assess its technical and economic feasibility in large-scale commercial projects. The objective of

DOI: 10.17185/duepublico/48884

this demonstration project is to build a 10MWe closed-loop SCO_2 cycle adapted to the heat source characteristic of CSP. In the scope of this project, some key technical aspects that are critical for the future commercial application of SCO_2 cycle in CSP will be investigated: (1) Optimal SCO_2 cycle design for CSP; (2) 15MWe-scale high-temperature and high-efficiency turbine design and operation; (3) Near-critical point compressor design and operation; (4) 40MW-scale compact heat exchanger design and operation; (5) Near-critical CO_2 cooler design and operation; (6) 30MW-scale molten salt/CO_2 heat exchanger design and operation; (7) High-temperature (>620 ℃) heat transfer fluid selection; (8) High temperature (>620 ℃) thermal energy storage system design and operation; (9) High temperature (>620 ℃) electrical heater; (10) System operation and control; (11) System flexibility analysis; (12) Material test for SCO_2, molten salt and high-temperature heat transfer fluid; (13) Cold storage. This papers aims to give an overview of project concept. System design and technical considerations behind are presented and discussed.

SHOUHANG DUNHUANG 10MWE CSP PLANT

The 10MWe CSP plant to be retrofitted is located in Dunhuang, Gansu Province, North-West of China, which started operation since 2016. This is a solar thermal power plant operated with molten salt tower, 15h two-tank molten salt storage, a 10MWe water steam Rankine cycle and a 20MW air cooler. With the design scale of thermal storage, it could provide enough heat to realize 24-hour continuous operation. More information is given in Table 1.

SCO_2 + CSP DEMO SYSTEM DESIGN

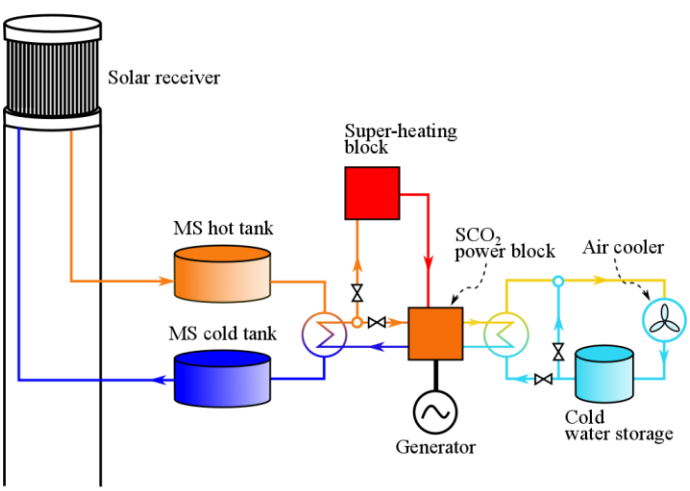

Figure 2. Demonstration system concept

The demonstration system design concept is shown in Figure 2. It consists of heliostat field, solar tower and receiver, thermal energy storage system with one hot tank and one cold tank, SCO_2 power block, superheating block, cooling system with cold storage. The demonstration project keeps the current existing solar field and thermal energy storage system with minor modification on the instrumentation, piping and pumping system of TES system.

Table 2
Main design boundary conditions and hypotheses for preliminary performance assessment of demonstration project

Parameters	Value
SCO_2 cycle net power (MWe)	10
Molten salt maximum temperature (℃)	530
Molten slat exhaust temperature (℃)	>290
Design molten salt mass flow rate (kg/s)	80
Compressor isentropic efficiency (%)	80
Turbine isentropic efficiency (%)	85
Heat exchanger min. pinch temperature (℃)	10
Heat exchanger pressure drop (bar)	1
Max. CO_2 pressure (bar)	250
Min. CO_2 temperature (℃)	35

A SCO_2 power block is built in parallel with the current water steam Rankine cycle. Since the water stream Rankine cycle is kept, it is possible to use the electricity generated by it to help the startup of SCO_2 cycle. One of the demonstration project objectives is to investigate high-temperature operation of SCO_2 turbine (>= 620 ℃), but using the current existing molten salt system, the maximum temperature that can be achieved is 565 ℃, which is not enough for high-temperature turbine operation, therefore, a super-heating block is added after the main heater between current molten salt and CO_2 to heat CO_2 temperature to the desired temperature. With extra heating, it is expensive to operate in long-term, as a result, the high-temperature operation mode is kept only for research purpose. During normal operation, the only heat source comes from the current solar filed and TES system.

The cooling system is an indirect water cooling system with atmosphere as the final heat sink. SCO_2 cycle is sensitive to the fluctuation of cycle minimum temperature, especially for the near-critical compressor operation. The indirect cooling is selected to attenuate the fluctuation of local air temperature through the intermediate cooling water cycle. With this indirect cooling design, it is also possible to integrate cold storage into it, which can be beneficial to stabilize cycle operation and achieve higher overall efficiency.

SCO_2 POWER BLOCK DESIGN BOUNDARIES

The supercritical CO_2 cycle to be demonstrated is designed to operate with the existing solar field and thermal storage system in a commercial project. Therefore, there are more constraints to be respected during the SCO_2 system design phase:

1) Design net power output to be 10MWe: The retrofitting will be done in a commercial project to replace the original water steam Rankine cycle, therefore, according to the local regulation, the design power output cannot be modified.
2) Molten salt exhaust temperature to be lower than 320 ℃: The cold storage tank is design to operate with molten salt at 290 ℃, in order to avoid any technical risk regarding

DOI: 10.17185/duepublico/48884

Table 3
Summary of considered cycles

Cycle	Max .T	Min. P	CO_2 flow	Split ratio	Power	Eff.	MS Outlet T+	HX UA (100% = 4857 kW/ ℃)*	Complexity (Nbr. Turbomachinery)
	℃	bar	Kg/s	%	MWe	%	℃	%	
RG-IC	520	68.5	96.2	-	10.06	34.6	290	100.00	3
RC-IC	438	82.6	145.9	31.67	9.95	34.2	290	107.47	4
RC-IC	470	82.0	126.5	33.04	9.33	36.6	320	98.68	4
RC-PH	439	87.1	162.94	34.17	10.01	34.4	290	133.05	3
RC-DPH	464	86.9	141.8	24.92	10.18	34.9	290	100.29	3
RC-IC-PH	468	82.1	137.7	27.74	10.35	35.6	290	113.87	4
PartC-PH	485	72.3	122.0	41.32	10.40	35.8	290	101.00	4

**100% means UA=4857 kW/ ℃, higher than 100% means the heat exchanger needs more UA*
+ The available molten salt temperature utilization range for this project is 290 ℃ ~ 530 ℃. To maximize the overall power output, the result shows that the molten salt will always be 100% utilized, i.e. between 290 ℃ and 530 ℃.

cold tank cooling and thermal expansion, after consulting the design team of thermal storage system, 320 ℃ is selected as the upper limit for molten salt exhaust temperature.

3) Molten salt inlet temperature for main heater to be 530 ℃: The original design molten salt maximum operation temperature is 565 ℃, but due to the complexity of solar field control and high variation of weather conditions, the maximum molten salt achieved is mostly 530 ℃.
4) Dry cooling: The 10MWe CSP plant locates in one of the most water-deficient area in China, therefore, any cooling system with high need or high consumption of water is strictly prohibited. Only dry cooling is allowed in this region.

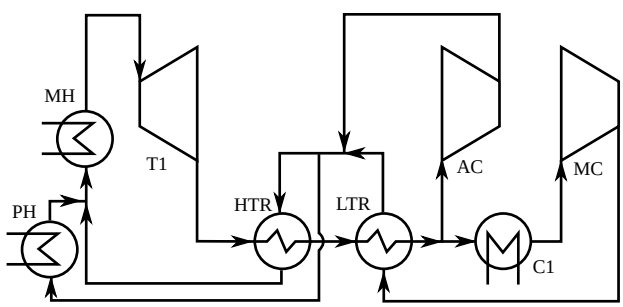

Figure 3. RC-PH: recompression cycle with preheating

As a demonstration project, it is important to demonstrate performance but in the meanwhile, the risk should be well controlled. Higher cycle pressure can help to improve cycle efficiency, but it brings also high risk for the design and operation of turbine. For ultra-supercritical water steam cycle, a 30MPa high-pressure turbine design is already achieved and commercialized, but for SCO_2, a less mature technology, a 5MPa margin is taken to reduce the risk of less of experience. 35 ℃ is selected as the design minimum cycle temperature in order to keep a safe margin with the critical temperature of 31.10 ℃. For the efficiency of turbo-machineries, 89% and 93% is expected for compressor and turbine when the technology becomes mature, but at the current stage, a 9% margin is taken as a first estimation due to lack of experience for most of the suppliers. Compared to turbo-machineries, there are more effective and comparable reference for heat exchanger, but considering the cost, 10 ℃ / 1bar is selected as the minimum pinch temperature and maximum pressure drop for the main heat exchanger in the cycle. The main design boundary conditions are summarized in Table 2.

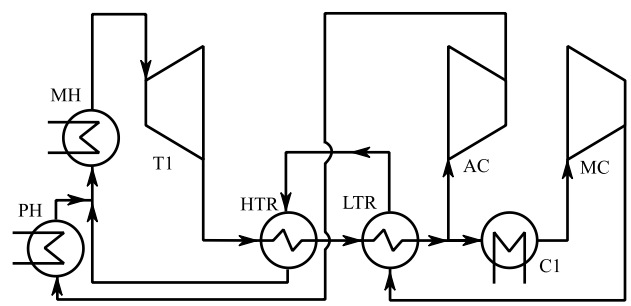

Figure 4. RC-DPH: recompression cycle with direct preheating

SCO_2 CYCLE DESIGN

For the selection of SCO_2 cycle, as a SCO_2 demonstration project to prepare for the commercialization of SCO_2 in CSP, the selected cycle layout should be optimized for CSP application, or at least able to demonstrate all the key cycle configurations. In the meantime, the complexity should be moderate in order to control the project risk well. Cost is also an important factor to be considered. Therefore, all the reheating cycles are not considered due to an extra turbine increases significantly the cost and has no direct benefit in terms of new technology demonstration. Two different approaches are adopted for cycle

DOI: 10.17185/duepublico/48884

selection: one based on expertise and the other based on a SCO_2 cycle superstructure developed by Zhao Qiao in EDF R&D [20].

In order to achieve a good compromise of demonstration interest for future commercial project, salt utilization, cost, complexity and efficiency, a wide range of cycles are studied, six among them are presented in this paper:

1) Regenerative with intercooling (RG-IC)
2) Recompression with intercooling (RC-IC)
3) Recompression with preheating (RC-PH)
4) Recompression with direct preheating (RC-DPH)
5) Recompression with intercooling and preheating (RC-IC-PH)
6) Partial cooling and direct preheating (PartC-PH)

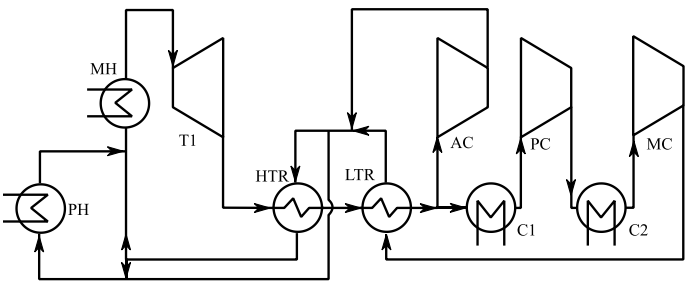

Figure 5. RC-IC-PH: recompression cycle with intercooling and preheating

With the cycle power output as the final optimization objective function (Details on the optimization can be found in another study of the author [21]), these 6 cycles are modeled and optimized within the imposed boundary conditions by this project. The key parameters after optimization for each studied cycle is shown in Table 3. The final results show that SCO_2 cycles tend to use 100% of the molten salt available to maximize the power output. RG-IC offers a very good performance especially considering its simplicity and underlined lower risk for development and low cost. However, due to its incapability to solve the pinch problem in the recuperator, RG-IC could not achieve a high efficiency which would be interesting enough for the future commercial project. Therefore, RG-IC is not selected for this project which is dedicated to demonstrate an optimal cycle for CSP. Within the constraint imposed, especially the one that limits molten salt outlet temperature to be lower than 320 ℃, RC-IC cycle could possibly reach a higher efficiency of 36.6% with MS exhaust temperature of 320 ℃, but it produces less power. Preheating, in this case, helps to improve slightly the efficiency at the cost of 30% more heat exchanger. A different way to implement preheating, called "Direct preheating", can improve further the efficiency and with smaller heat exchanger, by using only one recuperator in the cycle and make the recompression flow go directly into the preheater. The better performance of "Direct preheating" mainly comes from the hypothesis made for the performance evaluation, because with only one recuperator, it helps to save compression work. The difference between PH and DPH is shown by Figure 3 and Figure 4. RC-IC-PH and PartC-PH cycles give very similar performance, with a higher efficiency than the others. However, PartC-PH cycle is a trans-critical which will bring big challenge to the design and operation of compressor. Therefore, RC-IC-PH cycle is finally selected for the implementation, even with a 14% bigger heat exchanger.

In the RC-IC-PH cycle, with the demonstration boundary conditions imposed, the CO_2 flow is heated to 468 ℃ by 530 ℃ molten salt in the main heater, then is discharged in the turbine from 250 bar to 85 bar. The hot outlet flow of turbine goes through the recuperators to transfer the remaining thermal energy into the cold CO_2 flow on the other cycle of cycle, then is split into two parts. One flow, ~72% of total flow, goes into the pre-cooler to be cooled to 35 ℃, pre-compressed to 107 bar then re-cooled to 35 ℃ for the final compression to 250 bar, the high pressure flow then enters the LTR to recuperate the thermal energy of turbine outlet flow. The other flow, ~28% of the total flow, goes into the auxiliary compressor to be compressed directly to 250bar, then mixed with LTR cold outlet flow. Before entering HTR, one part of flow, ~30%, is re-split into the preheater to be heated by the low-temperature molten salt which comes from the outlet of main heater, the other part goes into HTR to be heated by hot turbine outlet CO_2 flow. These two flow mix before the main heater, and are then heated to the maximum temperature before entering turbine. This cycle achieves 35.6% of cycle net efficiency and 100% utilization of molten salt, which brings no significant modification to the operation of storage system and solar system. It produces 10.35MWe as the gross power with maximal temperature and pressure of 468 ℃ and 250.0bar, minimum temperature and pressure of 35.0 ℃ and 82.1 bar, recompression split ratio of 27.74%. A summary of turbo-machinery parameters and heat exchanger parameters is given in Table 4 and Table 5.

Table 4
Summary of turbomachinery parameters

	Turbine	*PC*	*MC*	*AC*
Power (MW)	16.1	0.6	2.4	2.8
Inlet T (℃)	468	35	35	68
Inlet p (bar)	250	82	106	83
CR	2.9	1.3	2.4	3.0
Mass flow rate (kg/s)	137.7	99.5	99.5	38.2

Table 5
Summary of heat exchanger parameters

	LTR	HTR	PH	MH	C1	C2
Heat duty (MW)	20.8	26.5	7.5	21.6	14.5	4.2
Average LMTD (℃)	15.5	18.9	25.4	36.5	15.3	10.6
UA (kW/K)	1488	1468	339	745	1094	396
Effectiveness (%)	88.6	89.1	90.6	91.5	70.6	57.9

DOI: 10.17185/duepublico/48884

SUPERHEATING SUBSYSTEM

SCO_2 cycle starts to show advantage compared to water steam Rankine cycle when the cycle maximal temperature reaches around 550 ℃ (This temperature depends on the design of SCO_2 and water steam cycle). Even with the current molten salt, when turbine and compressor design and manufacturing become mature, i.e. compressor efficiency reaches 89% and turbine efficiency reaches 93%, it is also possible for a SCO_2 cycle without reheating of 500 ℃ / 30 MPa to reach the same level of cycle net efficiency as a water steam cycle (around 45.3%) at the cost of around 4% loss of molten salt storage potential. Considering SCO_2 has the potential to save power block cost, increase significantly flexibility and reduce parasitic energy consumption, it remains a strong competitor of water steam cycle at this temperature level. However, in order to be able to fully demonstrate the feasibility of SCO_2 cycle for the future generation of CSP technology with higher temperature thermal storage medium in the scope of this project, it is necessary to raise the SCO_2 cycle temperature to a higher temperature, at least beyond 620 ℃.

Yet, with today's solar system and solar salt in Dunhuang plant, the molten salt can only be raised to 565 ℃ at most, which is not enough compared to the desired temperature. Therefore, a superheating system is considered. To realize the superheating block, seven options have been preliminarily reviewed: three options with direct heating of CO_2 and four options with indirect heating of CO_2, with an intermediate heat transfer fluid (HTF):

1) Direct heating by gas combustion: CO_2 enters a natural gas boiler at a temperature around 500 ℃ and leaves at 620 ℃. Considering the SCO_2 gas boiler has been used in TPRI's 5 MWe project, there is no significant technical barrier to overcome. However, with a high inlet flow temperature of around 500 ℃, the efficiency of gas boiler is very low. It is possible to redesign the boiler to make use of the low-grade heat of flue gas, but this increases significantly the system complexity with no interest for the future CSP application. In the meantime, natural gas is expensive.
2) Direct electrical heating supplied by a PV solar farm: CSP with PV is a commercially interesting concept to be demonstrated. After evaluation with self-developed dynamic model, a 5MWe solar PV farm is needed to generate enough electricity for superheating, which implies a large amount of supplementary investment. In addition, the policy complexity of coupling a commercial PV project with a demonstration project also brings huge challenge to make this PV farm profitable. Another reason is that the instability of PV electricity production may make the experimental plan unpredictable or high additional cost from the purchase of electricity from the grid.
3) Direct electrical heating supplied by auto-consumption: This approach could be implemented if the high temperature operation mode is not too often and for research use only. Nevertheless, electric heater that is able to withstand very high pressure (200~300bar) are expensive.
4) High temperature heat transfer fluid in the receiver and storage: This approach has been seriously considered as the receiver design of the demonstrator is able to withstand up to 900 ℃. But the molten salt and the storage system is not able to withstand a temperature up to 620 ℃. New heat transfer fluid and new storage tank can be implemented but only after a dedicated material corrosion test on the new heat transfer fluid. Besides, the investment is very high.
5) High temperature heat transfer fluid heated by electrical heating from auto-consumption or PV farm: To simplify the electrical heater design and cut its cost down, the use of indirect heating is considered. Besides, this option allows the demonstration of high-temperature HTF / CO_2 heat exchanger, high-temperature HTF electric heater and the high-temperature HTF operation, which is useful for the design of future-generation of CSP. This option will be prioritized for this conceptual design.
6) High temperature heat transfer fluid heated by gas combustion: This option reduces some potential difficulties in the design of the gas heater and allow the demonstration of a HTF/CO2 superheater, but it has the same problem as mentioned in option 1.
7) High temperature heat transfer fluid heated by gas engine exhaust: This option aims to mitigate the fuel cost of gas heating by the cogeneration of electricity and high temperature HTF but today there is no available gas engine or gas turbine with an exhaust gas temperature above 650 ℃ at the required scale. Moreover, it is very unlikely that this option could contribute to reduce lifetime cost of the demonstration.

Based on this review and analysis, option 5 (indirect electrical heating) will be considered as main solution, mainly due to its long-term interest for future generation of CSP. Technical and economical assessment of this option is ongoing. If it is not validated at the current phase or classified as high risk, a smaller scale high-temperature HTF operation loop will be built for material test and loop operation study. In the meantime, option 1 and option 3 are taken as backup solution if no technically and economically feasible HTF is found.

Several promising candidates for HTF under discussion now are Chloride salts (ClMgNaK and ClZnNaK), Nitrate Salt, sodium and low melting point glass.

COOLING SYSTEM WITH COLD STORAGE

Dunhuang, located in North-West region of China, belongs to temperature continental climate zone, whose main temperature charateristics is the large annual mean temperature difference. As indicated by Figure 6, Dunhuang has an annual temperature difference of 58.7 ℃ and an annual mean temperatrue of 9.78 ℃. Besides, the daily temperature difference is also very high: even during the hotest day when the daily highest temperatrue is 38 ℃, the minimum temperature can be as low as 17 ℃. This kind of annual temperature distribution

DOI: 10.17185/duepublico/48884

makes it an ideal case to test cold storage. Figure 7 shows the average daily temperature for every month in Dunhuang. It can be observed that even during the hottest monthes, i.e. June, July and August, there are only 9 hours per day when ambient temperature is higher than 25 ℃. For the rest 15 hours, the ambient temperature is lower than 25 ℃ with an average temperature of 20 ℃ and a minimum temperature of 16 ℃. Based on this daily temperature difference, together with proper sizing and operation of air cooler, there can be sufficient cooling source to maintain the SCO_2 cycle operated with the highest efficiency during a whole day.

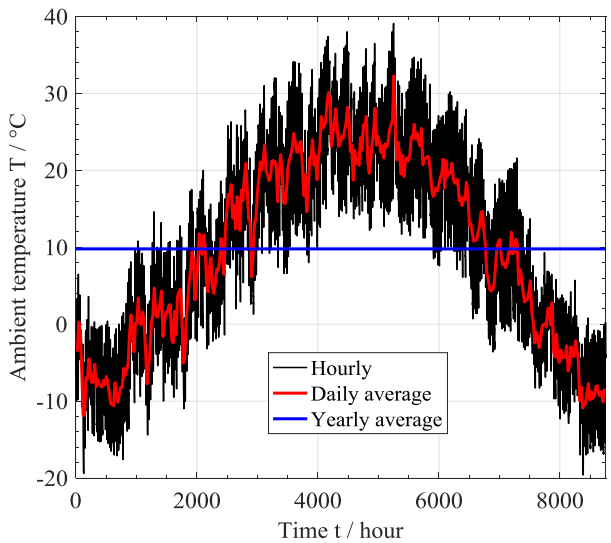

Figure 6. Yearly temperature distribution in Dunhuang

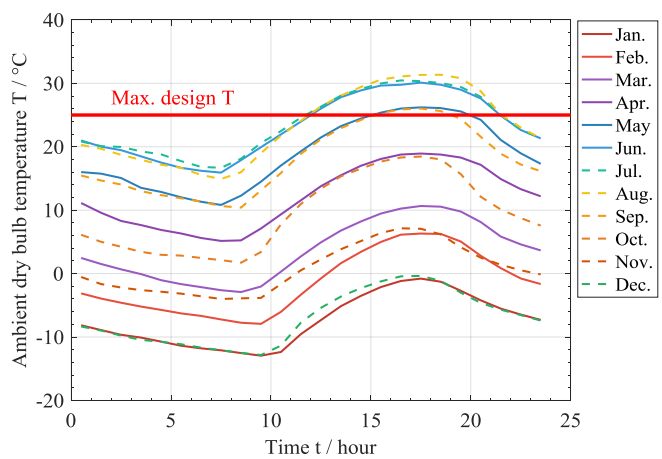

Figure 7. Daily temperature profile in Dunhuang

A simplified dynamic model is build for the cooling system with the objective to conduct a preliminary performance assessment. The model consists of the following key modules:

- Air cooler: the air cooler is modeled assuming that there is an ideal controller to reduce the cooling water temperature to the desired temperature level which is the real time air temperature – design air cooler pinch.
- A water/CO_2 heat exchanger: it is modeled in detail to give a precise estimiation on the cooling water flow required to cool down the CO_2 flow to the design temperation before entering compressors, when the temperature of cooling water changes due to ambient temperature variation. For more modeling detailes, you can refer to another paper presented by EDF R&D China on dynamic modeling and control system design.
- Cold storage water tank: it is modeled as a perfectly stirred reactor.

The main opeation logics of cooling system are:

- The air cooler is operated at full load whenever the ambinet temperature is below design ambient temperature. Otherwise, it is stopeed.
- The cold stoage is discharged whenever the cooling water is needed, at the required flow rate.

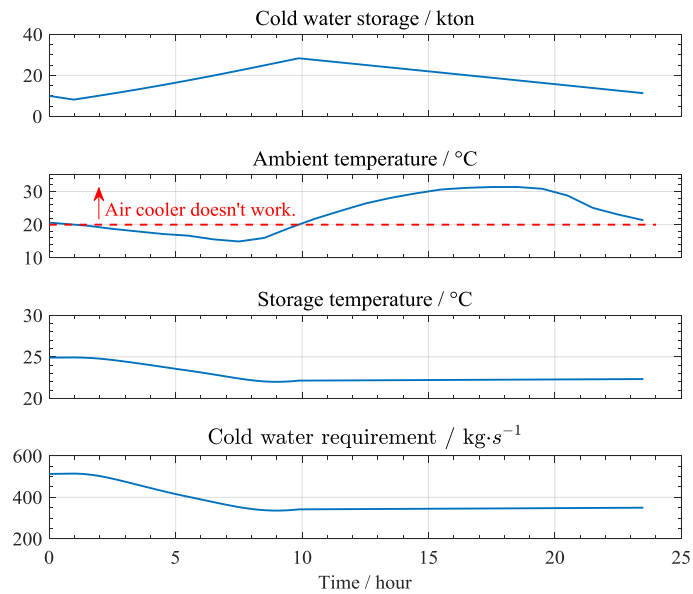

Figure 8. 24-hour continuous full-load operation during a typical day in August, with air-CO_2 pinch of **15 ℃**, initial storage water temperature of 25 ℃, an oversized air cooler, two times capacity than that required during cycle full load: (1) Evolution of cold water storage amount; (2) Evolution of ambient temperature; (3) Evolution of cold water storage temperature; (4) Evolution of required cold water for SCO_2 system.

For the selected demonstration cycle, given a constant 5 ℃ temperature pinch for air cooler and 10 ℃ pinch for the CO_2 cooler, the maximum design ambient temperature is 20 ℃. Thereforem, the air cooler is set to operate only when ambient temperature is below 20 ℃. The dynamic model created is used to simulate a 24-hour full-load continuous cycle operation in a day with a typical daily temperature profile in August, which represents the typical temperarture profile that one of the hottest month would have. Figure 8 shows the transient behavior of cold storage during the day with an oversized air-cooler capacity, two times capacity than that required during cycle full load. The cold storage tank is initiated with 10k tons 25 ℃ water. At the beginning of the day, the ambient temperature is higher than the

DOI: 10.17185/duepublico/48884

design temperature, air cooler does not work at the moment, then a slight decrease is observed. But later, the ambient temperature decreases below 20 ℃. It creates a perfect heat sink for air cooler, therefore air cooler is controlled to work at full load, generates two times than necessary cold water, resulting in an accumulation of cold water in the storage tank. The storage is used later during the day when ambient temperatrue is much higher than the design temperature. Finally, with the over-sized air cooler, at the end of day, there is still enough water storage for the next-day operation even with a hot weather like this day. Air cooler only works 42% of a day while the cycle operate at full time and full load, with no impact from hot ambient temperature on the cycle operation and efficiency. The peak storage is reached when the temperatrue starts to exceed the design criterion. During the day, due to the lower ambient temperature region, the storage water temperature decreases monotonically until the moment when air cooler does not work any more. This trend helps a lot to reduce the consumption of cold storage because with a lower cold temperature, a lower mass flow rate is sufficient to achieved the same cooling requirement.

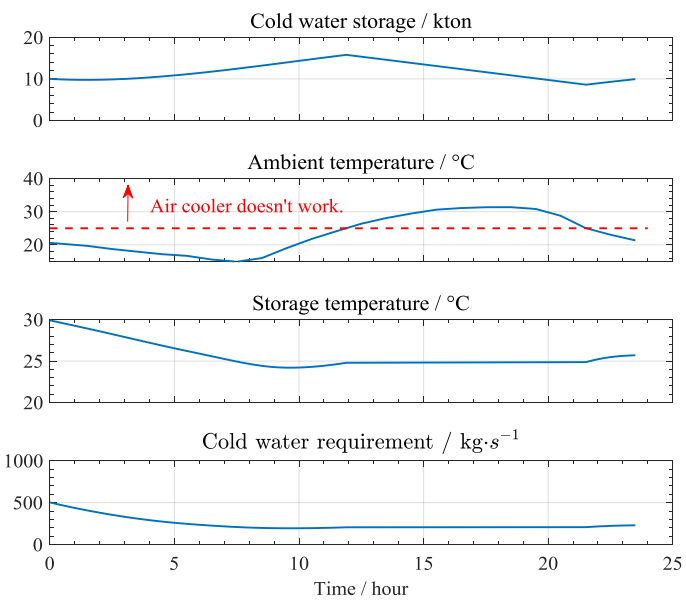

Figure 9. 24-hour continuous full-load operation during a typical day in August, with air-CO_2 pinch of **10 ℃**, initial storage water temperature of 30 ℃, an sub-sized air cooler, 80% capacity than that required during cycle full load: (1) Evolution of cold water storage amount; (2) Evolution of ambient temperature; (3) Evolution of cold water storage temperature; (4) Evolution of required cold water for SCO_2 system.

If the air/CO_2 temperature pinch is reduced to 10 ℃, 5 ℃ for air/water and 5 ℃ for water/CO_2, as shown by Figure 9, the peak storage is significantly reduced to 160k ton, meaning that the storage could be reduced as well as the initial investment. In the meantime, the air cooler allowed operation time is increased from 8 hours to 12 hours, therefore, the air cooler capacity is reduced to 80% of that required at cycle full load. This further reduce the cost of air cooler, even compared to the case with no cold storage. Besides, it should be emphasized that this is the operation during the hottest day with no deep optimization on the control of storage. If more efforts could be done, there is still space for further optimization.

Alternatively, by taking into account the possibility to implement cold storage, the design minimum temperaure could be reduced to further increase the cycle design efficiency, even a SCO_2 Rankine cycle could be considered. For a recompression cycle with intercooling and preheating, given the mature technology hypothesis (turbine efficiency 93%, compressor efficiency 89%, 5 ℃ pinch and 1 bar pressure drop for heat exchangers), Figure 10 underlines the benefit of reducing cycle minimum temperature. In this case, when cycle mnimum temperature is reduced by 5 ℃, efficiency is increased by +1.34pt%. Considering the significant efficiency improvement potential and the daily electricity price variation, it could also be economically feasible to implement extra cooling facility with cold storage. Detailed techno-economic analysis will be done further evalute its feasibility and benefit.

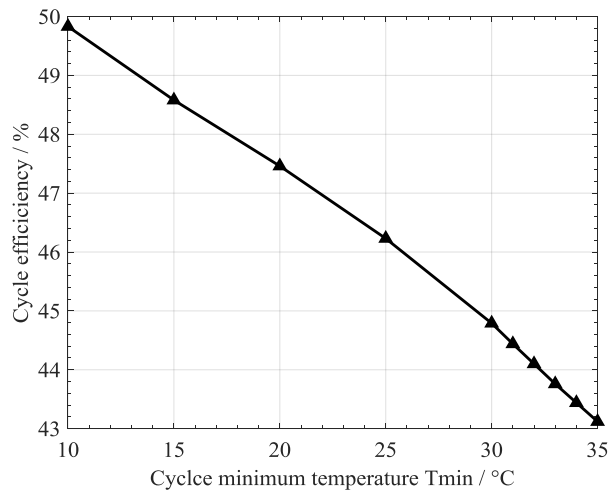

Figure 10. Variation of cycle efficiency with respect to cycle minimum temperature for a recompression SCO_2 cycle with intercooling and preheating, which operates with molten salt between 565 ℃ and 290 ℃, turbine efficiency of 93%, compressor efficiency of 89%, heat exchanger pinch of 5 ℃ and heat exchanger pressure drop of 1 bar

During winter, as shown by Figure 7, the maximum daily temperature is only 0 ℃. Freezing may bring problems to the operation. Therefore, necessary insulation or putting the main piping underground are considered to prevent the freezing risk. Base the experience of thermal power plant operated in the same region, these measures should be enough to solve this issue.

CONCLUSION

In this paper, the Shouhang-EDF SCO_2 demonstration project is presented, in terms of overall system design, key technical path selection and consideration. The main conclusions are as follows:

1) As an industrial scale SCO_2 project integrated with a commercial CSP plant, it is able to demonstrate equipment design, system design and operation that could be scaled up to large industrial application of SCO_2 cycle.

DOI: 10.17185/duepublico/48884

2) Superheating solutions are now under investigation. It will be implemented in the second phase of project, but during the design in the first phase, all the necessary space and connections are kept for the further implementation of superheating block. Besides, in the first phase, material test will be done for high-temperature heat transfer fluid, and a small test loop for high-temperature heat transfer fluid is under discussion.
3) The climate in Dunhuang makes it an ideal place to implement cold storage in order to achieve better overall efficiency. The detailed investigation is ongoing to find the optimal design by taking into account the power plant operation and cost.
4) The SCO_2 RC-IC-PH cycle is selected for the final implementation as a compromise demonstration interest for future commercial project, salt utilization, cost, complexity and efficiency. It achieves a net efficiency of 35.6%.

The conceptual design and the first-round discussion with possible suppliers are finished. The second round discussion will be closed before the end of May, 2019, when a short list of suppliers will be determined for the following detailed discussion. In parallel, the basic design is ongoing, cooperating with design institute. The final determination of key equipment supplier will be fixed before June, 2019. Because after the clear definition of project scope, the project is progressing aggressively recently, it is expected to have more to discuss during the conference in September.

NOMENCLATURE

Symbols	
A	Heat exchanger area (m^2)
P	power (MW)
p	pressure (bar)
T	temperature (℃)
U	Heat exchange coefficient ($W/m^2/K$)
Abbreviations	
AC	auxiliary compressor
C	cooler
CO_2	carbon dioxide
CR	Compression ratio
CSP	concentrated solar power
HTF	heat transfer fluid
HTR	high temperature recuperator
HX	Heat exchanger
IC	intercooling
LCOE	levelized cost of electricity
LMTD	log mean temperature difference
LTR	low-temperature recuperator
MC	main compressor
MH	main heater
MS	Molten salt
PartC	partial cooling
PC	pre-compression / pre-compressor
PCHE	Printed circuit heat exchanger
PH	Preheating / preheater
PV	Photovoltaic
RC	recompression
RG	regenerative
RH	reheating
SCO_2	supercritical CO_2
TES	thermal energy storage

REFERENCE

[1] Liu S, Bie Z, Lin J, Wang X. Curtailment of renewable energy in Northwest China and market-based solutions. Energy Policy 2018;123:494–502. doi:10.1016/j.enpol.2018.09.007.

[2] Turchi CS. Supercritical CO2 for Application in Concentrating Solar Power Systems. Supercrit. CO2 power cycle Symp. Troy, New York, 2009.

[3] Glatzmaier GC, Turchi CS. Supercritical CO2 as a Heat Transfer and Power Cycle Fluid for CSP Systems. ASME Int. Conf. energy Sustain. San Fr., 2009. doi:10.1115/es2009-90332.

[4] Ma Z, Turchi CS. Advanced Supercritical Carbon Dioxide Power Cycle Configurations for Use in Concentrating Solar Power Systems. Supercrit. CO2 power cycle Symp. Boulder, Color., 2011.

[5] Turchi CS, Ma Z, Dyreby J. Supercritical Carbon Dioxide Power Cycle Configurations for Use in Concentrating Solar Power Systems. ASME Turbo Expo, Copenhagen, Denmark, 2012. doi:10.1115/GT2012-68932.

[6] Neises T, Turchi CS. Supercritical carbon dioxide power cycle design and configuration optimization to minimize levelized cost of energy of molten salt power towers operating at 650℃. Sol Energy 2019;181:27–36. doi:10.1016/j.solener.2019.01.078.

[7] Dostal V. A Supercritical Carbon Dioxide Cycle for Next Generation Nuclear Reactors. Massachusetts Institute of Technology, 2004.

[8] Feher EG. The supercritical thermodynamic power cycle. Energy Convers 1968;8:85–90. doi:10.1016/0013-7480(68)90105-8.

[9] Angelino G. Real Gas Effects in Carbon Dioxide Cycles. ASME Gas turbine Conf. Prod. show, Cleveland, Ohio, 1969. doi:10.1115/69-gt-102.

[10] Ahn Y, Bae SJ, Kim M, Cho SK, Baik S, Lee JI, et al. Review of supercritical CO 2 power cycle technology and current status of research and development. Nucl Eng Technol 2015;47:647–61. doi:10.1016/j.net.2015.06.009.

[11] Ashcroft JA, Kimball KJ, Corcoran MR. Overview of Naval Reactors Program Development of the Supercritical Carbon Dioxide Brayton System. Supercrit. CO2 power cycle Symp. Troy, Now York, 2009.

[12] Kimball KJ, Clementoni EM. Supercritical Carbon Dioxide Brayton Power Cycle Development Overview. ASME Turbo Expo, Copenhagen, Denmark, 2012.

DOI: 10.17185/duepublico/48884

[13] Clementoni EM, Cox TL, Sprague CP. Startup and Operation of a Supercritical Carbon Dioxide Brayton Cycle. J Eng Gas Turbines Power 2014. doi:10.1115/1.4026539.

[14] Pasch J, Conboy T, Fleming D, Rochau G. Supercritical CO2 recompression Brayton cycle: completed assembly description. California: 2012.

[15] Moore J, Brun K, Evans N, Chiranjeev Kalra. Development of 1 MWe supercritical CO2 test loop. ASME Turbo Expo, Montr. Quebec, Canada, 2015.

[16] Moore JJ, Cich S, Towler M, Allison T, Wade J, Hofer D. Commissioning of a 1 MWe supercritical CO2 test loop. Supercrit. CO2 power cycle Symp. Pittsburgh, Pennsylvania, 2018.

[17] Wang J, Huang Y, Zang J, Liu G. Recent Research Progress on Supercritical Carbon Dioxide Power Cycle in China. ASME Turbo Expo, Montréal, Canada, 2015. doi:10.1115/gt2015-43938.

[18] Li H, Zhang Y, Gao W, Yao M. Preliminary design study on a Multi-Megawatts Fossil-based Supercritical CO2 Recompression and Reheat Integral Test Facility. Supercrit. CO2 power cycle Symp. San Antonio, Texas, 2016.

[19] Li H, Zhang Y, Yao M, Yang Y, Han W, Bai W. Design assessment of a 5 MW fossil-fired supercritical CO2 power cycle pilot loop. Energy 2019;174:792–804. doi:10.1016/j.energy.2019.02.178.

[20] Zhao Q, Mecheri M, Neveux T, Privat T, Jaubert NJ. Superstructure optimization of supercritical CO2 Brayton cycle by MINLP approach. Supercrit. CO2 power cycle Symp. Pittsburgh, Pennsylvania, 2018.

[21] Zhang J, Le Moullec Y. A systematic comparison of supercritical CO2 Brayton cycle layouts for concentrated solar power with a focus on thermal energy storage utilization. Eur. Conf. Supercrit. CO2 power Syst. Paris, Fr. (NOT Publ. YET), 2019.

DOI: 10.17185/duepublico/48884

Published in: 3rd European sCO2 Conference 2019

DOI: 10.17185/duepublico/48884
URN: urn:nbn:de:hbz:464-20191002-173945-4