# Economic forecasting for solar-energy assisted supercritical CO2 closed cycle

Noaman, Mohamed B.; Morosuk, Tatiana; Tsatsaronis, George

In: 2nd European sCO2 Conference 2018



DOI: https://doi.org/10.17185/duepublico/46100

URN: urn:nbn:de:hbz:464-20180827-153128-6

Link: https://duepublico.uni-duisburg-essen.de:443/servlets/DocumentServlet?id=46100

2nd European supercritical CO2 Conference
August 30-31, 2018, Essen, Germany

2018-sCO2.eu-130

# ECONOMIC FORECASTING FOR SOLAR-ENERGY ASSISTED SUPERCRITICAL $CO_2$ CLOSED CYCLE

**Mohamed Noaman***
TU Berlin
Berlin, Germany
**Email:** mohamed.noaman@tu-berlin.de

**Tatiana Morosuk**
TU Berlin
Berlin, Germany

**George Tsatsaronis**
TU Berlin
Berlin, Germany

## ABSTRACT

In this paper, an economic forecast for two different system capacities is presented. This forecast is based on cost information gathered from various recently published literature and industry sources concerned with collector field and power cycle cost analysis. The forecast focuses on predicting the effect of introducing different setups for solar-energy assisted supercritical carbon dioxide ($sCO_2$) closed cycle to the power generation market assuming different scenarios for this technology within the market. Results show that the $sCO_2$ technology could help the concentrated solar power (CSP) industry to grow faster, increasing the potential of the sector not only for utility-scale power generation, but also for smaller community-scale projects. Further studies are recommended to improve the economic assessment and data collection of various components of the system.

## INTRODUCTION

According to the US National Renewable Energy Laboratory (NREL), its CSP Gen3 demonstration roadmap [1], as well as other various research institutes, the $sCO_2$ power cycle has the potential to take over the conventional steam-Rankine cycle when operating at elevated temperatures of 700 °C or greater. In this paper, a supercritical $CO_2$ cycle was simulated and applied to a central and modular CSP tower design.

Recently, the price of utility bids for electricity generated from CSP commercial technology has decreased under 7 USD cents per kWh. The current commercialized CSP technology is based on a Rankine steam cycle. This paper focuses on the analysis and evaluation of the Rankine steam cycle and the recompression $sCO_2$ closed cycle in combination with a CSP tower. The recompression $sCO_2$ closed cycle has shown best efficiency vs. economic value when applied to a CSP tower technology for supplying base-load electricity. The $sCO_2$ closed cycle compared with air-based gas turbines, achieves better compressibility performance leading to an increase in the net produced electricity by 30%. This results in significantly less mirrors to be required for the solar field with a smaller receiver and tower, meaning a significant decrease in the capital cost required compared to current technological setups. The $sCO_2$ cycle also helps in creating smaller modular tower units, denoting a higher attractiveness to investors.

Previous research has explored the feasibility and potential of coupling supercritical carbon dioxide power cycle to CSP technologies [2, 3]. Such cycles are investigated also in combination with nuclear energy because they are simple, compact, less expensive, and they have a high efficiency, a small primary resource consumption, and shorter construction periods that reduces the interest on money during construction [4]. Likewise, in the case of solar thermal applications, a supercritical $CO_2$ closed cycle offers higher cycle efficiencies or equivalent to supercritical steam cycle at temperatures appropriate for CSP applications, however the high pressure required for $sCO_2$ makes coupling to parabolic trough fields challenging [5]. Therefore, it is better suited for integration with CSP tower technologies.

It is also mentioned that it is better to implement CSP tower in modular designs ranging from 5 to10 MW, because circulating high pressure $sCO_2$ through a large power tower would be a challenge due to the volume and pressure of fluid being moved, leading to excessive piping costs and huge reduction in overall efficiency [6]. Previous studies also investigated various elements when operated in supercritical phase and showed that $CO_2$ has a moderate critical pressure value, making it generally an appropriate working fluid to be used besides being stable and an inert gas (in the temperature range of interest) [4]. According to Southwest Research Institute (SwRI), using $CO_2$ results in a smaller turbo-machinery than helium or steam, it is more efficient than helium at medium temperatures, and it is 10 times cheaper than helium [7]. The significant difference in sizes and consequently in costs are shown in Figure 1. Supercritical $CO_2$ has high density (energy/volume and energy/weight) near its critical point, which reduces the compressor work and increases efficiency. The compact size of turbomachinery offers less weight, less size and lower thermal mass which results in reduction of the installation, maintenance and operation costs of the system.

The $sCO_2$ closed cycle is currently emerging as a promising track for high efficiency power production, where it is mostly required for solar thermal energy to achieve cost parity with conventional energy sources. The cycle has been proposed as


DOI: 10.17185/duepublico/46100

early as 1977 for shipboard applications [1], where a considerable fuel reduction was possible. Supercritical $CO_2$ test loops has already been constructed at Sandia National Laboratories in the US and at Tokyo institute of technology in Japan. The data from these tests indicates sound results as a preliminary design and relatively good performance predictions.

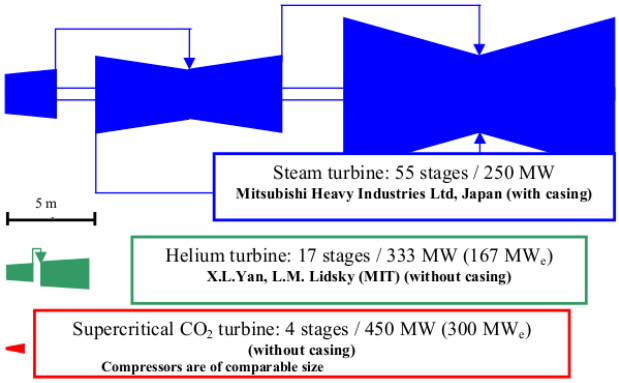


**Figure 1:** Turbine sizes for steam, helium and $CO_2$ [2]

Figure 2 shows a configuration of such a cycle with an integrated thermal energy storage system (TES). Because of the high-power density in the $sCO_2$ power generation rates, comparatively much lower volume flow rates are achieved compared to steam or air leading to lightweight, and low investment cost, where a modular design approach could be efficiently achieved in the range of 5 to10 MW.

In order to make this technology commercially viable, it is crucial to scale up these small laboratory tests onto multi Mega-watt range [3, 4]. In parallel also, some industry stakeholders are designing $sCO_2$ cycles to match current modular solar fields stating their high commercial competitiveness [5]. On top of that, the oil and gas industry has already developed technologies for compressing and pumping $CO_2$ at supercritical pressures leading to a decrease in the technological risk assessment of such systems [6].

The recompression configuration for the $sCO_2$ closed cycle have shown promising design efficiencies as well as good performance in demonstration test facilities stated earlier, together with using $sCO_2$ as both heat transfer fluid (HTF) in the solar field and working fluid within the power cycle, results into (a) relatively high temperatures at the solar receiver, (b) high degree of heat recuperation, (c) low average rejection temperature, (d) high fluid density near the compressor inlet (resulting in low compressor work), and (e) a low pressure ratio compared to a Rankine cycle [5].

There are three realization paths for such a solar tower/sCO2 power system, these are pathways based on the technology used in the design of the tower's receiver; molten salt, falling particle, or Gas-phase receivers. Based on current knowledge, all three have the potential to achieve grid parity. Pilot test loops and demonstration projects are needed to verify the technological feasibility. Research should also concentrate on checking the capability of each technology to satisfy the market requirements such as ramp rates, reliability, availability, and other standards [7]. In this paper, molten salt technology is used, as it represents the most mature technological approach.

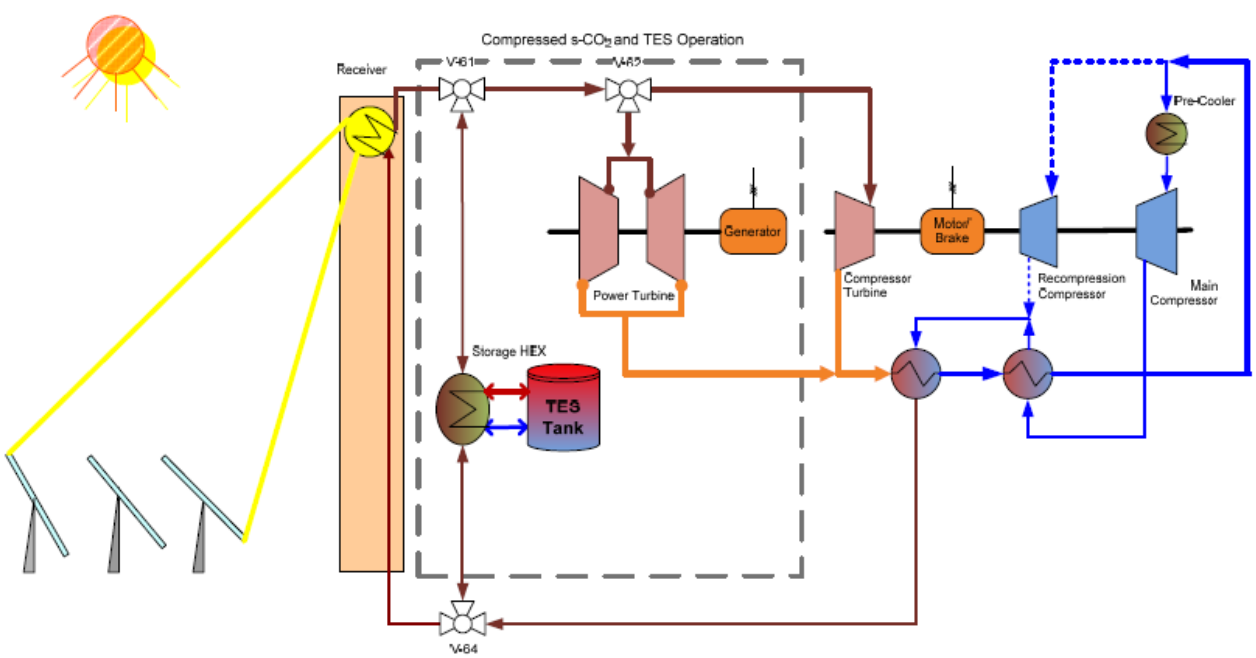


**Figure 2:** Dual shaft tower receiver $sCO_2$ closed cycle solar thermal power system with thermal energy storage [5]


DOI: 10.17185/duepublico/46100

## METHODOLOGY

Based on the literature reviewed during the study, it was clear that several $sCO_2$ cycles have been proposed and developed during the last several years, with a focus on CSP applications. According to the data presented earlier, a $sCO_2$ closed cycle with recompression is selected as the most efficient cycle setup in order to compare it with the current commercial steam Rankine technology as a power block system for CSP applications.

The focus here is directed towards focusing on steam Rankine cycle representing the mature power cycle conversion technology which is now commercially available and used for every single CSP tower plant currently in operation, under construction or even in preparation, against $sCO_2$ closed recompression cycle representing a promising technology expected to lead the market in the future, which so far demonstrated high-efficiency results through lab demonstrations and received a lot of attention from the industry according to several studies mentioned previously.

The two cycles have been designed, simulated and assessed employing the Ebsilon software from STEAG GmbH. The cycles have had been compared with each other economically using the levelized cost of electricity index (LCOE), which was calculated using the total revenue requirement (TRR) method. A real design data for the steam Rankine cycle CSP case has been acquired from the "Solar Two" demonstration plant project [8]. The complete design schematic which was simulated on Ebsilon for the steam Rankine CSP system is shown in Annex A in addition to a table that shows the most important details for the system's design parameters and assumptions.

Since the focus in this study was only on the power block, the design of the solar field has been assumed based on SOLERGY computer code [9] which was used to predict the annual energy production of the power plant. This code was also selected because it gives a realistic estimate of the actual energy produced by the Solar Two demonstration plant [10, 11].

For a proper comparative analysis, the $sCO_2$ recompression closed cycle has been simulated at a capacity rating like that of the Rankine cycle design (125 MW). Also, a 10 MWe modular cycle has been proposed and simulated to explore the thermodynamic results obtained from such modular system, where it is also possible to have a solar park consisting of several modular towers all connected to a central TES system in case of supplying baseload.

The general selected design operating conditions are summarized in Table 1 and the design schematic for the simulated $sCO_2$ cycle is shown in Annex B. The turbine inlet temperature (TIT) was selected to be 550 °C to accommodate the technical limitation accompanied with the molten salt storage system that is coupled to the cycle and the CSP tower.

To be able to simulate a baseload case; two concepts are simulated: the first one is a default central receiver design consisting of two towers each with a rating capacity of 125 MWe, and the other one, consisting of 12 towers, is utilizing a modular design proposal, where a solar modular tower park is used (each tower would house its own turbo-machinery so that multiple towers could be assembled in a single solar park), and the whole park is connected to one TES system [5]. In order to consider the same power plant capacity simulated for the steam Rankine case and to be able to compare capital costs previously allocated, the power output from the modular designs are multiplied by a scale-up factor.

**Table 1:** Design conditions for the $sCO_2$ cycle

| **Design Parameter** | **TIT 550°C** |
|---|---|
| Cycle Thermal Power ($MW_{th}$) | 318 |
| Thermal Efficiency (%) | 41 |
| Net Efficiency (%) | 39.3 |
| Net Electric Power (MWe) | 125 |
| Compressor Outlet Pressure (bar) | 200 |
| Pressure Ratio | 1.9 |
| Turbine Inlet Temperature (°C) | 550 |
| Compressor Inlet Temperature (°C) | 53 |
| Cooling Water Inlet Temperature (°C) | 43 |
| Mass Flow Rate (kg/Sec) | 2,300 |
| Recompressed Fraction | 0.3 |
| Turbine Efficiency (%) | 90 |
| Main Compressor Efficiency (%) | 89 |
| Recompressing Compressor Efficiency (%) | 89 |
| Generator Efficiency (%) | 98 |
| Total Heat Exchanger Volume ($m^3$) | 27.3 |

The recuperators used are Printed Circuit Heat Exchangers (PCHE), because one of the main goals is to keep the cycle compact, hence, this technology was selected since it is compact and has a small pressure drop. Shell and tube heat exchangers would not be suitable, because the tube wall would have to be thick to withstand the high-pressure difference between the high and the low cycle pressures and the heat exchanger would not be compact as required [2]. Table 2 includes detailed information about the recuperators and the air-coolers used in the designs based on this PCHE technology. The heat transfer coefficient for PCHE varies between 1,000-4,000 $W/m^2K$ for gas cooler, and 7,000-10,000 $W/m^2K$ for water/water [12].

Based on these two designs, the economic assessment for the two cases was then carried out through employing a comprehensive cost estimation, then the LCOE for the two cases was determined. The capital and the operation and maintenance costs used in the calculations were estimated based on some specific values obtained from the DOE Power Tower Roadmap (Industry input collected during a two-day workshop and combined with data from several cost studies). The roadmap enclosed a baseline economic calculation (what can be accomplished in commercial scale plants currently planned or under construction) vs. a workshop goal calculation (consensus values that are believed to be plausible given improvements in manufacturing and a more mature power tower industry) [13].


DOI: 10.17185/duepublico/46100

**Table 2:** Heat recovery at PCHE recuperators and air-coolers

| Case | Heat Exchanger | Q (MW) | ΔT (K) | U ($W/m^2K$) | Area ($m^2$) |
|---|---|---|---|---|---|
| 1st Case 125 MWe | LT Recuperator | 190 | 9.6 | 3,000 | 6,500 |
| | HT Recuperator | 840 | 17.7 | 3,000 | 15,800 |
| | Air-cooler | 188 | 3.1 | 7,000 | 8,600 |
| 2nd Case 10 MWe | LT Recuperator | 8 | 20 | 3,000 | 130 |
| | HT Recuperator | 43 | 4.8 | 3,000 | 3,000 |
| | Air-cooler | 10 | 4 | 7,000 | 350 |

## RESULTS

The LCOEs for the steam Rankine cycle case and the two cases of the $sCO_2$ cycle were forecasted along the lifetime of the project (30 years). The result of this forecast is benchmarked against combined cycle gas fired power plants as an example for one of the most efficient conventional energy technologies. The average international price of natural gas during the last 10 years was around 4.7 $/MMBtu [14]. Also according to the international energy agency (IEA), the LCOE for combined-cycle gas turbine (CCGT) power plant technology is 63 $/MWhe levelized over 25 years lifetime [15] at an inflation rate of 2.5% per year for the US dollar, the LCOE produced from CCGT would be 85 $/MWhe at year 2019 (start of the project's lifetime). Based on these financial parameters, a forecasted benchmark was constructed for the resulted LCOE of the study cases under investigation against that of a gas-fired combined-cycle power plant (CCGT) as demonstrated in Figure 3.

Consequently, the results showed that the CCGT technology is expected to be less expensive than the three study cases until the year 2034 (15 years after the starting date), at which the LCOE for the recompression $sCO_2$ closed cycle integrated with a central tower case starts to level-up with that of a CCGT at 1.5% escalation rate of fuel. Then around the year 2037 (just 3 years later) the CCGT LCOE at 1.5% fuel escalation rate, again levels-up this time with that of the mature tower technology (molten-salt central tower integrated with default steam Rankine cycle). Finally, the LCOE for a CCGT at 1% fuel escalation rate would level-up with the $sCO_2$ central tower case on the year 2041.

It is evident as well, that at 0.5% fuel escalation rate the CCGT technology is expected to have a competitive edge over the three CSP study cases. However, the lifetime of a CCGT is assumed here to be 25 years only vs. 30 years for the three CSP study cases under investigation, leaving additional 5 years, at which the CSP plants would still be making stable profits. Moreover, the hypothetical CSP solar park (through aggregating $sCO_2$ closed modular towers) might become a profitable alternative as well 25 years (~2046) after the assumed starting date.

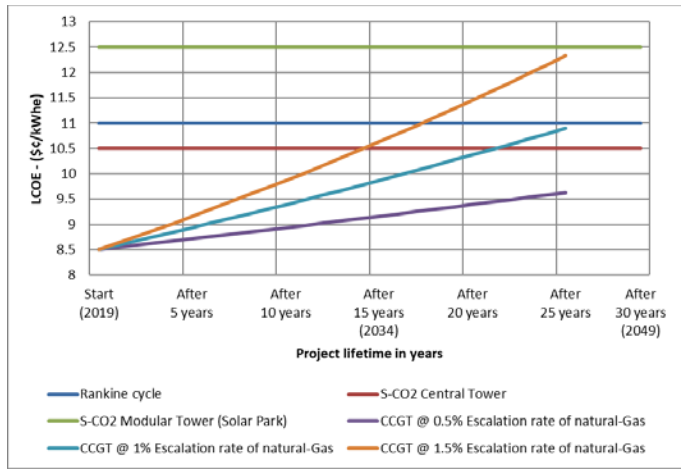


**Figure 3:** Calculated LCOEs for the three study cases vs. CCGT at different assumptions for fuel escalation rate

The fuel escalation rate assumed in this study is the periodic rate at which the global price of fuel increases minus the general inflation rate, which is the rate of increase in general consumer prices. The range assumed for the natural gas escalation rate from 0.5 to 1.5% is a very conservative forecast compared to the range of projected Henry Hub natural gas prices that depends on the assumptions about the availability of oil and natural gas resources and drilling technology. According to the US Energy Information Administration, natural gas prices are projected to double by the year 2040 [16].

## CONCLUDING REMARKS

So far, only steady state analyses have been carried out, meaning that the behavior of the cycles, especially when integrated within the different setups mentioned above, is not known yet; however, some research studies take place currently in the US, Australia, Israel, Spain and in Germany particularly at the DLR [17]. This in return would help in understanding and selecting the most promising concepts and control strategies [2].

A comprehensive focus should also be directed toward developing materials suitable for the recompression $sCO_2$ closed cycle for the system components and the overall system to reach a high performance. This includes developing, testing and analyzing system components discretely as well as interconnected; corrosion experiments at high pressures (~200 bars) such as those assumed within the designs, material testing for turbine inlet temperatures reaching up-to 900 °C; and investigating the performance of PCHEs under the conditions stated in this study, especially the use of liquid metals as an alternative for thermal storage (instead of thermally limited molten-salts) reaching higher thermal storage temperatures (higher than 600 °C) in order to be compatible with the $sCO_2$ closed cycle designs [18].

From the economic viewpoint, air-based Brayton cycles, high-efficiency hybrid cycles as well as supercritical steam cycles are also feasible alternatives that should be economically evaluated against the research cases studied here, since these were mentioned in Sandia's tower roadmap to offer about 13%


DOI: 10.17185/duepublico/46100

improvement in efficiency and 25% decrease in capital costs in terms of $/kWe [13]. Additionally, the feasibility of tower receivers that withstand temperatures of approximately 700 °C and reaching 900 °C as well necessitate more thorough investigations that depend on the expected future technical breakthroughs [19]. On top of that, the feasibility of the presumed solar park proposal with a central integrated TES needs further investigation from the economic and technical viewpoints. The same applies to the central receiver setup integrated with the $sCO_2$ cycle (as the pipe losses were neglected), and to the economic burden of the intermediate heat exchanger between the primary HTF (molten-salt) loop and the secondary working fluid ($sCO_2$) loop.

## LIST OF ACRONYMS

| | |
|---|---|
| $sCO_2$ | Supercritical Carbon Dioxide |
| CSP | Concentrated Solar Power |
| NREL | National Renewable Energy Laboratory |
| SwRI | Southwest Research Institute |
| SNL | Sandia National Laboratories |
| MIT | Massachusetts Institute of Technology |
| HTF | Heat Transfer Fluid |
| TES | Thermal Energy Storage System |
| LCOE | Levelized Cost of Electricity |
| TRR | Total Revenue Requirement method |
| TIT | Turbine Inlet Temperature |
| PCHE | Printed Circuit Heat Exchanger |
| DOE | US Department of Energy |
| HTR | High Temperature Recuperator |
| LTR | Low Temperature Recuperator |
| IEA | International Energy Agency |
| CCGT | Combined Cycle Gas Turbine |
| DLR | German Aerospace Center |

## REFERENCES


[1] O. Combs, *An Investigation of the Supercritical CO2 Cycle (Feher Cycle) for Shipboard Application*, Cambridge, Ma, USA: MIT, 1977.

[2] V. Dostal, M. J. Driscoll and P. Hejzlar, "Supercritical Carbon Dioxide Cycle for Next Generation Nuclear Reactors," The MIT Center for Advanced Nuclear Power Technology Program, Massachusetts, USA, 2004.

[3] B. Iverson, T. Conboy, J. Pasch and A. Kruizenga, "Supercritical CO2 Brayton cycles for solar-thermal energy," *Applied Energy*, pp. 111:957-70, 2013.

[4] Y. Kato, T. Nitawaki and Y. Muto, "Medium temperature carbon dioxide gas turbine reactor," *Nuclear Energy and Design*, no. 230, pp. 195-207, 2004.

[5] M. Zhiwen and C. S. Turchi, "Advanced Supercritical Carbon Dioxide Power Cycle Configurations for Use in Concentrating Solar Power Systems," in *Supercritical CO2 Power Cycle Symposium*, Boulder, 2011.

[6] M. Dunham and B. Iverson, "High-Efficiency Thermodynamic Power Cycles for Concentrated Solar Power Systems," *Renewable and Sustainable Energy Reviews*, pp. 758-770, 2014.

[7] M. Mehos, C. Turchi, J. Vidal and et al., "Concentrating Solar Power Gen3 Demonstration Roadmap," National Renewable Energy Laboratory (NREL), Golden, CO USA, 2017.

[8] A. B. Zavoico, "Solar Power Tower Design Basis Document," Sandia National Laboratories, Albuquerque, NM, USA, 2011.

[9] M. C. Stoddard, S. E. Faas, C. J. Chiang and J. A. Dirks, "SOLERGY - A Computer Code for Calculating the Annual Energy from Central Receiver Power Plants," Sandia National Laboratories, Livermore, CA, USA, 1987.

[10] D. J. Alpert and G. J. Kolb, "Performance of the Solar One Power Plant as Simulated by the SOLERGY Computer Code," Sandia National Laboratories, Albuquerque, NM, USA, 1988.

[11] E. Hugh and G. J. Reilly, "An Evaluation of Molten Salt Power Towers Including Results of the Solar Two Project," Sandia National Laboratories, Albuquerque, NM, USA, 2001.

[12] Heatric - Printed Circuit Heat Exchangers, "Typical characteristics of diffusion-bonded heat exchangers," 2017. [Online]. Available: https://www.heatric.com/typical_characteristics_of_PCHEs.html. [Accessed 02 12 2017].

[13] Sandia National Laboratories, "Power Tower Technology Roadmap and Cost Reduction Plan," Albuquerque, New Mexico, 2011.

[14] Energy Information Adminstration, "natural Gas Annual Prices," 2018. [Online]. Available: https://www.eia.gov/dnav/ng/hist/rngwhhdA.htm. [Accessed 06 12 2017].

[15] International Energy Agency, "Tackling Investment Challenges in Power Generation in IEA countries," IEA, head of publications service, Paris, France, 2007.

[16] US Energy Information Adminstartion, "Annual Energy Outlook 2017 with projections to 2050 (AEO 2017)," EIA, Washington, DC, 2017.

[17] M. Quero, R. Korzynietz, M. Ebert, A. Jimenez, A. Del Rio and J. Brioso, "Solugas – Operation experience of the first solar hybrid gas turbine system at MW scale," *Energy Procedia*, no. 49, pp. 1820-30, 2014.

[18] C. Forsberg, P. Peterson and H. Zhao, "High-temperature liquid-flouride-salt-closed-brayton-cycle solar power towers," *Sol Energy Eng*, vol. 129, pp. 141-6, 2007.

[19] K. H. Clifford and D. B. Iverson, "Review of high-temperature central receiver designs for concentrating solar power," *Renewable and Sustainable Energy Reviews*, no. 29, pp. 835-846, 2014.



DOI: 10.17185/duepublico/46100

[20] Solar Med Atlas, "Solar Med Atlas," 2018. [Online]. Available: http://www.solar-med-atlas.org/solarmed-atlas. [Accessed 03 05 2017].

[21] J. G. Kolb, "An Evaluation of Possible Next-Generation High Temperature Molten-Salt Power Towers," Sandia National Laboratories, Albuquerque, NM, USA, 2011.

[22] Arizona Public Service Company, Department of Energy, Pacific Gas and Electric Company, Bechtel National, "Solar Central Receiver Technology Advancement for Electric Utility Applications: Topical report. Phase IIA and IIB," Pacific Gas and Electric Company, San Francisco, CA, USA, 1992.

[23] K. Miner, "Pratt & Whitney Rocketdyne Receiver Overview, CSP Program Review Meeting," Albuquerque, NM, USA, February 9-11, 2010.

[24] C. Turchi, "Current and Future Costs for Parabolic Trough and Power Tower Systems in the US Market," in *Proceedings of the SolarPACES 2010 Conference*, Perpignan, France, 2010.

[25] C. Turchi, M. J. Wagner and C. F. Kutscher, "Water Use in Parabolic Trough Power Plants: Summary Results from WorleyParsons' Analyses," National Renewable Energy Laboratory, Golden, CO. USA, 2010.

[26] D. J. Chapman and D. Arias, "An Assessment of the Supercritical Carbon Dioxide Cycle for Use in a Solar parabolic Trough Power Plant," in *Proceedings on S-CO2 Power Cycle Symposium*, Troy, NY, 2009.

[27] D. S. Deffenbaugh, "Southwest Research Institute," 26 July 2012. [Online]. Available: https://www.swri.org/press-release/swri-industry-collaborators-receive-38-million-us-doe-develop-concentrating-solar. [Accessed 03 09 2017].



DOI: 10.17185/duepublico/46100

## ANNEX A

## STEAM RANKINE TOWER SCHEMATIC LAYOUT

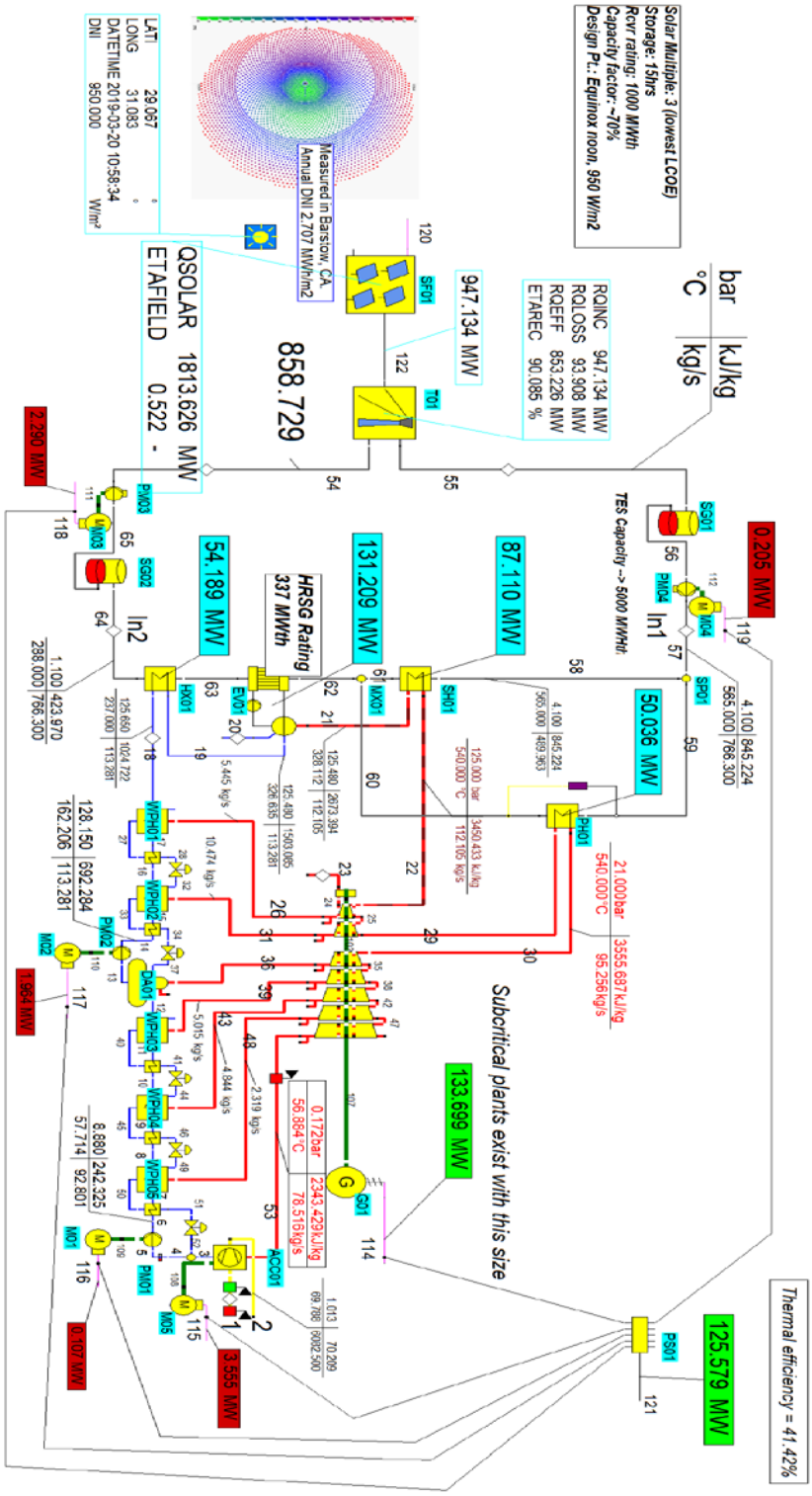




DOI: 10.17185/duepublico/46100

## ANNEX A

## RANKINE CYCLE PARAMETERS AND ASSUMPTIONS

| Scope | Parameters | Assumptions | Additional Comments |
|---|---|---|---|
| **Location details** | Coordinates | Latitude 29.0667°<br>Longitude 31.0833° | Location details obtained from solar med atlas website [20] |
| | Sunshine duration | 9 hours average/day | |
| **Ambient conditions** | Wind speed | 17 km/hour | |
| | Atmospheric pressure | 0.95 bar | |
| | DNI at design point | 950 W/m$^2$ (equinox) | Same as [21] |
| | DNI at coordinates | 2.4 MWh/m$^2$/year | Obtained from solar med atlas [20] |
| | Plant design lifetime | 30 years | Default for CSP plants |
| **Solar Field details** | Heliostat type/size | 95 m$^2$<br>Advanced Thermal Systems Co (ATS) | Reliably operated for more than 20 years so far [21] |
| | Number of heliostats | ~20 thousands | Calculated using Ebsilon 10 |
| | Reflective area | ~2 km$^2$ | |
| | Heliostat field efficiency | ~52% | [8] |
| **Receiver** | HTF | Molten-salt | Demonstrated at Solar Two and scale-up projects in operation and under construction |
| | Capacity | 1,000 MW$_{th}$ | Size similar to utility studies done in the USA [22] |
| | Peak solar flux | 1 MW/m$^2$ | Solar Two was 0.8 but current salt receivers have higher flux limits [23] |
| | Effectiveness | ~90% | Same as [21] |
| **Thermal Storage** | Capability | 15 hours | To insure a 70% capacity factor |
| | Storage capacity | 5,000 MW$_{th}$ | |
| **Capital Cost Estimates** | Heliostats | 120 USD/m$^2$ | These capital costs were compared against economic analysis present in next chapter |
| | Receiver/Tower | 150 USD/kW$_{th}$ | |
| | Storage System | 25 USD/kW$_{th}$ | |
| | Rankine power block | 800 USD/kWe | |
| | O&M costs | 50 USD/kW-year | |
| | Land cost | 2 USD/m$^2$ | |
| | Pricing year | 2010 | |
| | Analysis period | 30 years | |
| | Inflation rate | 2.5% | |
| **Power Cycle** | Plant Setup | Baseload – 24h operation | |
| | Capacity Factor | 70% (SM3) Solar Multiple | Solar Two had SM1.2 but lowest LCOE occurs at 3 SM [24] |
| | Gross power rating | ~134 MWe | Subcritical plants exist with this size in market |
| | Cooling method | Dry cooling condenser<br>Design temp: 42.8 °C | Design condition: hottest time of the year [25] |
| **Cycle efficiency** | Wet-cooled | 43% | |
| | Dry-cooled | 41% | |


DOI: 10.17185/duepublico/46100

**ANNEX B**

**RECOMPRESSION $SCO_2$ CYCLE FOR CSP TOWER WITH TES TECHNOLOGY AT 550 °C TIT**

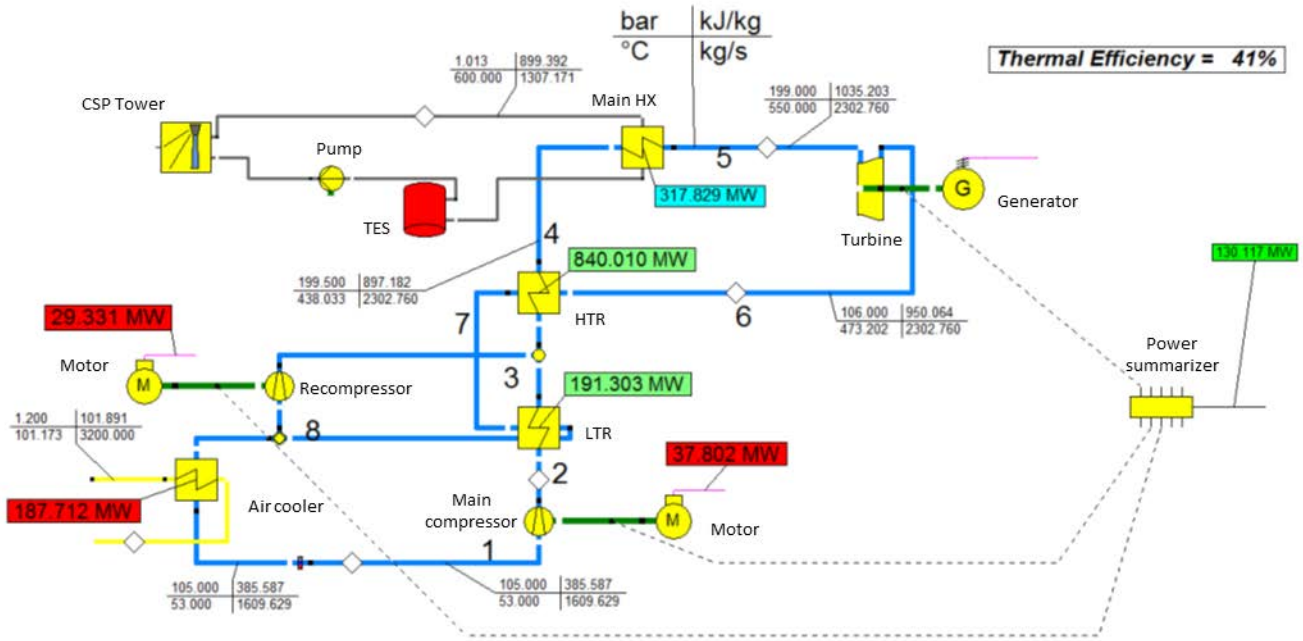


## Cycle description

Recompression cycle offers high energetic efficiency with simple arrangement and minimum number of components. In this cycle, one additional compressor is added compared to the simple $sCO_2$ cycle configuration. The flow at point 8 is divided into two streams after leaving the low temperature recuperator. A fraction of the flow rejects heat to the cold sink at the air cooler and exits at (1) going to the main compressor near to critical point, while the other fraction is pressurized at the additional recompression compressor without cooling down. Then the two streams reach the same pressure and mix at point 3, and the mixed stream enters the high temperature recuperator (HTR) and leaving out at point 4. The cycle maximum temperature is achieved at the main heat exchanger (main HX) by absorbing the thermal energy from the molten salt fluid. Afterwards the flow at point 5 is expanded in the turbine to the low cycle pressure and enters the HTR and LTR to preheat the high-pressure stream.

The splitting ratio after point 8 should have the value, which offers the highest possible efficiency in the cycle. Hence, sensitivity analysis for the splitting ratio was conducted. Although the re-compressor requires extra energy, the overall efficiency is improved. Another important advantage is the improvement of the cycle's heat recovery. Splitting the flow after LTR decreases the heat capacity of the high-pressure side in LTR, which helps to avoid common pinch point problems.


DOI: 10.17185/duepublico/46100