Challenges in supercritical CO2 power cycle technology and first operational experience at CVR

Vojacek, Ales; Hacks, Alexander Johannes; Melichar, Tomas; Frybort, Otakar; Hájek, Petr

In: 2nd European sCO2 Conference 2018

DOI: https://doi.org/10.17185/duepublico/46075

URN: urn:nbn:de:hbz:464-20180827-122255-0

Link: https://duepublico.uni-duisburg-essen.de:443/servlets/DocumentServlet?id=46075

2nd European supercritical CO2 Conference
August 30-31, 2018, Essen, Germany

2018-sCO2.eu-100

CHALLENGES IN SUPERCRITICAL CO2 POWER CYCLE TECHNOLOGY AND FIRST OPERATIONAL EXPERIENCE AT CVR

Ales Vojacek*
Research Centre Rez
Rez, Czech Republic
Email: ales.vojacek@cvrez.cz

Alexander Hacks
Universität Duisburg-Essen
Duisburg, Germany

Tomas Melichar
Research Centre Rez
Rez, Czech Republic

Otakar Frybort
Research Centre Rez
Rez, Czech Republic

Petr Hajek
Research Centre Rez
Rez, Czech Republic

ABSTRACT

CVR, Research Centre Rez, Czech Republic, is investigating advanced Brayton cycles using supercritical CO_2 (sCO_2) as working fluid, which has potential for high thermodynamic efficiency of a power plant. This innovative technology needs to be demonstrated and experimentally proven by numerous tests. For this purpose, CVR has built a sCO_2 experimental loop within Sustainable Energy project (SUSEN). This unique facility is flexible, modifiable and suitable for performance testing of key components of sCO_2 conversion cycles such as compressor, turbine, heat exchanger and valves together with material research with wide range of parameters: temperature up to 550°C, pressure up to 30 MPa and mass flow rate up to 0.35 kg/s. This paper covers literature survey on major challenges in sCO_2 development and the design of the loop with description of key components. The first operational experience is given as well as the discussion on the measured data set. Finally, it is outlined how the sCO_2 loop is involved in various research projects such as sCO_2-HeRo project (heat removal safety back-up system for LWR) for testing of sCO_2 turbomachine (TAC) and air sink heat exchanger (sink HX).

INTRODUCTION

In pursuit of inventing effective ways of generating electricity, researchers are experimenting with different working fluids as an alternative to the conventional water-steam in energy conversion cycles. Such a fluid is e.g. supercritical CO_2 and the idea of applying it in energetics using Brayton cycle is far not new. The advantages of the sCO_2 are coming from its real gas properties have been outlined and discussed during the 60's [1]-[2]. Over the past several decades there has been a prolific increase in research and development that make deployment of the sCO_2 systems more likely. Number of institutions have built their sCO_2 facility. Most of them are focusing on heat transfer (HT) near the critical region (7.4 MPa, 31°C) in simple circular heated geometries. First experimental data are dated to 60's. The very first HT research in sCO_2 was performed in USA and in former Soviet Union [3]-[4]. An exhaustive literature survey on an early research on supercritical HT is reported in [5]. Recently built experimental loops for sCO_2 HT investigation near pseudo-critical point found in literature are summarized in Annex A [6]-[16]. The main motivation of these facilities is to deliver new HT correlations, which could be transferred for the supercritical water as both media show similarities in pseudo-critical region and the parameters can be scaled from one supercritical media to another like proposed in [17] and [18]. To develop such a facility for sCO_2 is more economical than for water where the critical point is much higher (22.1 MPa, 374°C). Heat transfer at the supercritical pressure is very different from that at the subcritical pressure due to the drastic variations of the physical properties of fluids at around the pseudo-critical temperature. In addition, at heating sections oriented vertically with upward flow, the buoyancy effect reduces turbulence and shear stress causing heat transfer deterioration (HTD) [17]. The supercritical water enhances the efficiency of the fossil-fuel power plants already and supercritical water reactor design is part of the future nuclear reactors concepts (Generation IV). In such technologies, the problematic pseudo-critical point of water is being crossed in a heat source, i.e. boiler or nuclear reactor. Hence, HT become of great importance since HTD could lead to fuel overheating and in the worst case to core

DOI: 10.17185/duepublico/46075

meltdown. However, this is not the case for the sCO_2 energy applications. In the sCO_2 Brayton cycle, the pseudo-critical point will be crossed in a cooler. As far as for the HT, the heat transfer deterioration or enhancement would only lead to underestimated or overestimated size of the cooler, potentially decreasing/increasing the overall thermodynamic efficiency of the conversion cycle.

A number of researchers [19]-[43] have investigated heat transfer in the coolers using sCO_2 as an effective alternative refrigerant (in air-conditioning and heat pump systems using trans-critical cycles) to conventional substances such as chlorinated and fluorinated hydrocarbons, which are much more harmful to the environment and destroy the ozone layer. The very first research on HT is dated back to 1937 and was conducted in Germany. From the studies, it can be concluded that heat transfer is enhanced greatly in the near-critical region, with a maximum heat transfer coefficient occurring at the corresponding pseudocritical temperature and the maximum heat transfer coefficient decreases as the pressure increases. No HTD in the sCO_2 was found in literature. The experimental work on coolers in sCO_2 is shown in Annex B.

The sCO_2 Brayton cycle architecture has been largely studied since the choice of recommended cycle configuration is far not straightforward. Researchers are conducting theoretical studies on numerous sCO_2 configurations such as condensation, simple Brayton, precompression, recompression, split expansion, partial cooling, cascade, simple re-heat, double re-heat cycles [44]. For waste heat recovery application with sensible heat (e.g. flue gas combustion cycle), bottom cycle is needed to maximize the usable power. Various cascade like cycles are recommended [45]. However, the recompression cycle (operating at pressures of 20-25 MPa maximum temperature of 650°C) is perceived as the most promising cycle layout for the heat flux sources applications such as nuclear and solar power plants [46]. This is owing to the fact that the pinch point problem in the recuperator is in recompression cycle prevented by the lower mass flow at high pressure side of the low temperature recuperator, hence the heat capacity mass flow on both sides are equal and recuperation is prolonged. In order to prevent large HXs volume the introduction of effective compact HXs has to come in place to enable achieving a high degree of regeneration with recuperators of reasonable cost. The most compact of those presently available are Printed Circuit Heat Exchangers (PCHX) and they can be utilized in Brayton cycle as coolers (cooled by water for instance, but not by air because of too high pressure drop), yet more importantly as recuperators. This new type of HX has been developed by Heatric Pty Ltd over the last few decades [47]. Flat plates are photochemically etched with heat-transfer passages and then diffusion bonded together to form a solid block which can withstand high pressure and high temperature (700°C at 80 MPa/800°C at 35 MPa for Inconel 617 [48], 600°C at 20 MPa [49]) unlike the finned plate HX. A unique channel design requires optimization to maximize heat transfer while minimizing pressure drop. Based on the literature survey, the surface geometries of PCHXs can be categorized as either continuous or discontinuous-fin surfaces. Continuous fin surfaces include straight, sinusoidal, and zig-zag channels, while discontinuous surfaces include louver, S-shaped, and airfoil fin geometries. The experimental work performed in PCHX with sCO_2 is summarized in Annex C [50]-[58]. A comparison of a straight, two different zig-zag (40°/32.5° angle) and two types of airfoil (4/8.1 mm length) channel geometries at nearly equivalent cross-sectional area ratios have been made [55]. Based on this study, two airfoil geometries appear to perform much better than the zig-zag geometries, provided almost the same thermal performance with hydraulic losses reduced to almost the level of equivalent hydraulic straight channel.

The next task and likely the most challenging one is the sCO_2 turbomachinery design. The turbomachinery components claims to be highly compact due to significant power densities resulting in economically attractive solution. Sandia National Laboratory [59] has begun testing of sCO_2 compressors and turbines of power of few hundreds of kWe with poor efficiencies. The isentropic/polytrophic efficiencies of most power turbomachines increase with size and so does the sCO_2 machines. Hence, there is a need for bigger scale demonstrator in multi-MWe range in order to move the concept closer to market. Echogen [60] has developed sCO_2 10 MWe heat engine technology for waste heat recovery. However, there seems to be still some open issues, since they claim to have reached just 3 MWe for limited period of time. Within the SunShot program funded by Department of Energy, GE together with Southwest Research Institute aims to develop 10 MWe recompression sCO_2 cycle for CSP. In advance, they have built a simple recuperated Brayton cycle to test 1 MWe turbine [61]. There are several areas in which additional research is needed in order to make the sCO_2 cycle commercially viable. The impeller, diffusor and diaphragm need an advanced design to reach good efficiency and cope with the highly non-ideal behavior of the sCO_2 close to the critical point, possibly choked and two-phase flow conditions. Proper sealing is a key issue. Due to high pressure differences and design limitations (axial lengths) the labyrinth seals are not suitable. The dry gas seals are considered to have the best performance. The design of bearings to balance the thrust loads is challenging. Gas-foil thrust and journal bearings seem to be suitable option. They are widely used in small scale machines. However, the applicability for large scale machines needs to be tested. The rotation speed of sCO_2 turbomachines of 10 MW will likely be few times higher the standard 3000 rpm. Hence, design of gear box or high speed generators is required. If a shaft from a turbine is sealed, e.g. by dry gas seal, then commercial products of high speed generators/gear boxes are available.

Attractive thermal efficiencies of sCO_2 are reached at pressures as high as 25 MPa and temperatures as high as 650°C. Hence, material research is being conducted. Large number of corrosion data has been gained in University of Wisconsin. The corrosion behavior of commercial austenitic steels 800H and

DOI: 10.17185/duepublico/46075

AL-6XN and ferritic-martensitic steels F91 and HCM12A exposed to sCO_2 at 650°C and 20.7 MPa for up to 3000 hours was studied [55] with positive results. Further testing with various austenitic/ferritic steels is planned at CVR, Czech Republic and in Centro Sviluppo Materiali Spa, Italy, within the European H2020 project sCO2-Flex for 25MWe sCO_2 Brayton cycle coaled powered development.

A reliable operation of the sCO_2 Brayton cycle requires to carefully study the stability and control. The development and validation models that are capable of predicting operational performance characteristics in sCO_2 are important. Currently, there a few sCO_2 experimental loops equipped well enough to demonstrate sCO_2 Brayton cycle or at least a most part of it. It includes Echogen (waste heat recovery system, planned 10 MWe), SunShot (Simple recuperated cycle, 1 MWe and recompression cycle 10 MWe planned) Sandia National Laboratory (full Brayton recompression cycle, few hundreds of kWe reached), SCIEL loop in KAIST, South Korea (cycle for compressor testing, rest of the Brayton cycle on the way, few hundreds of kWe planned) and CVR, Czech Republic (Brayton cycle with piston pump and turbine substituted by reduction valve, 110 kW heat power). The experimental work performed in integral sCO_2 loops is summarized in Annex D [61]-[63].

CVR SCO2 EXPERIMENTAL LOOP DESCRIPTION

The sCO2 experimental loop was constructed within SUSEN (Sustainable Energy) project in 2017. This unique facility enables component testing of sCO2 Brayton cycle such as compressor, turbine, HX, valves and to study key aspects of the cycle (heat transfer, erosion, corrosion etc.) with wide range of parameters: temperature up to 550°C, pressure up to 30 MPa and mass flow rate up to 0.35 kg/s. The loop is designed to represent sCO_2 Brayton cycle behavior.

Annex E shows the piping and instrument diagram (PID) of the loop. The primary circuit is marked in thick red and it consists of following main components:

- The main pump (piston type), which circulates sCO_2 through the cycle with the variable speed drive for the flow rate control.
- The high and low temperature regenerative heat exchanger (HTR HX/LTR HX), which recuperates the heat, hence reduce the heating and cooling power.
- The 4 electric heaters (H1/1, H1/2, H2, H3), which have in total a maximum power of 110 kW and raise the temperature of sCO_2 to the desired test section (TS) inlet temperature up to 550°C.
- The reduction valve which consists of series of orifices to reduce the pressure and together with oil cooler (CH2) represent a turbine. Nominal temperature of oil (Marlotherm SH) is 140°C and flow rate is 0.4 kg/s. The oil is used due to the high temperatures of the exhaust heat (up to 550°C).
- The water cooler (CH1) cools down the sCO_2 at the inlet of the MP by water (nominal temperature 20°C, 1.4 kg/s flow rate of water).
- Air driven filling (reciprocating) compressor (gas booster station) which pumps the sCO_2 from the CO_2 bottles and also controls the operating pressure (the main parameters listed in Table 1).

Table 1: Parameters of the filling compressor.

Device	Filling compressor - DLE5-15-GG-C
Nominal inlet pressure of CO_2	0.5 MPa
Nominal outlet pressure	6.5 MPa
Maximum outlet pressure	30 MPa
Nominal flowrate	15 l_N/min
Nominal air pressure	0.6 MPa

The dashed blue line at the PID stands for the air cooled finned-tube sink HX testing layout and the green dash-and-dot line marks the modification for the turbomachinery performance testing.

The main operating parameters of the primary circuit are shown in Table 2.

Table 2: The main operating parameters of the sCO2 primary loop.

Maximum operation pressure	25 MPa
Maximum pressure	30 MPa
Maximum operation temperature	550°C
Maximum temperature in HTR	450°C
Maximum temperature in LTR	300°C
Nominal mass flow	0.35 kg/s

The sCO_2 loop layout is depicted in Figure 1 and the top view of the built facility is shown in Figure 2.

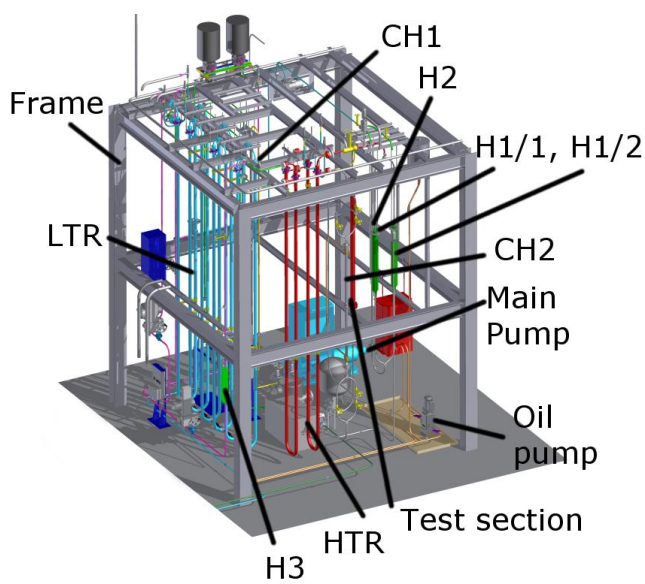

Figure 1: 3D CAD model of the sCO_2 loop.

DOI: 10.17185/duepublico/46075

Figure 2: A view from the top to the built sCO_2 loop.

Table 3 summarize parameters of MP and the schematic cross-section of MP is shown in Figure 3.

Table 3: Parameters of the main pump.

Device	Main Pump - PAX-3-30-18-250-YC-CRYO-drive 9/FM
Nominal inlet pressure	12.5 MPa
Nominal outlet pressure	25 MPa
Maximal outlet pressure	30 MPa
Nominal inlet temperature	25°C
Maximum inlet temperature	50°C
Nominal isentropic efficiency	0.7
Rotational speed	250÷1460 rpm
Volumetric flowrate	5÷30 l/min.

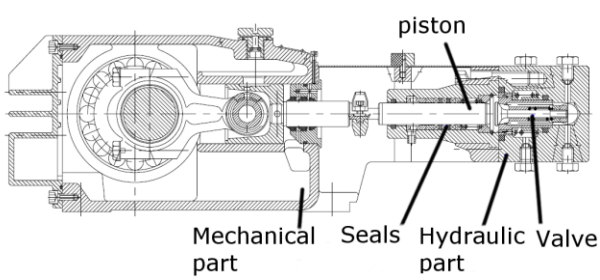

Figure 3: Cross-section of main pump.

The component geometry of the sCO_2 loop is described in Table 4.

Table 4: Component geometry of the sCO_2 loop

HTR + LTR (counter-flow shell and tube-type from SS)	Length of HTR = 20 m, Length of LTR = 60 m, Number of internal tubes = 7, Internal tube Ø 10 x 1.5 mm, Shell Ø 50 x 5 mm.
H1/1 + H1/2 (30 + 30 kW) (from SS)	Length = 0.95 m, Number of heating rods = 2 x 6, Diameter of a heating rod = 8 mm, Shell Ø 100 x 20 mm
H2 (30 kW) (from Inconel 625)	Length = 0.95 m, Number of heating rods = 2 x 6, Diameter of a heating rod = 8 mm, Shell Ø 73 x 6.5 mm
H3 (20 kW) (from SS)	Length = 0.75 m, Number of heating rods = 2 x 6, Diameter of a heating rod = 8 mm, Shell Ø 100 x 20 mm
CH1 (counter-flow shell and tube-type from SS)	Length = 7.5 m, Number of internal tubes = 7, Internal tube Ø 10 x 1.5 mm, Shell Ø 43 x 1.5 mm
CH2 (counter-flow shell and tube-type from Inconel 625/SS)	Length = 1.8 m, Number of internal tubes = 7, Internal tube Ø 10 x 1.5 mm, Shell Ø 43 x 1.5 mm
TS (from Inconel 625)	Length = 1.5 m, Shell Ø 73 x 6.5 mm
Pipeline from MP to T-junction LTR by-pass	Length = 4m, Tube Ø 22 x 4 mm
LTR by-pass	Length = 7 m, Tube Ø 22 x 4 mm
Pipeline from T-junction LTR by-pass to LTR	Length = 6 m, Tube Ø 22 x 4 mm
Pipeline from CH1 to MP	Length = 8 m, Tube Ø 20 x 3 mm

The electrical heater H3 with nominal power 20 kW is positioned at the bypass of the LTR in order to simulate the behavior of a recompression cycle.

OPERATIONAL PROCEDURES WITH SCO2 LOOP

The very first procedure necessary before starting-up the loop is vacuuming. It not only enables to eliminate all atmospheric gases, but also helps to remove unwelcome moisture. The system includes a vacuum pump which provides 20 kPa absolute pressure and is connected to an exhaust system to ambient. The loop is equipped with several joints from which it is possible to suck contaminants. The advantage is in an effective and economic handling of the CO_2 content. While some part of the loop needs to be opened and discharged the rest can stay full. In order to intensify the cleaning technique the CO_2 is let into the loop. The desired purity is checked by sampling. To assure that the loop is gas tight the created negative pressure should stay constant for several hours (obviously with vacuum pump switched-off).

The next process is the filling. To fill the loop with the required mass to achieve operating conditions, CO_2 vapor from

DOI: 10.17185/duepublico/46075

a standard pressurized bottle (where 2 phase CO_2 is stored) is introduced just before the water cooler CH1. The loop is initially filled quite quickly due to the high pressure difference in the bottle and the loop (approx. 60 bars). However, as the pressure in the system rises and the bottle content is decreasing, the process slows down. Hot air is used to heat up the bottle to speed up the filling. The weight of the bottle is measured in order to know how many CO_2 goes in. When a fixed mass based on model predictions gets near the normal operating mass which in our case is around 40 kg of CO_2 then the main circulation pump can start circulating the CO_2 content around. To adjust (increase) the pressure in the system the heaters are switched on. The maximum limit of 50 K/h temperature increase is controlled. As the system heats up and pressure rises the mass flow rate increases since the density at the inlet to the MP increases. If further mass adjustments are needed to reach desired parameters the air driven reciprocating compressor is used to boost the CO_2 to the loop and reducing the pressure can be performed through opening the bleeding valves with orifices installed in the pipe. For setting the inlet temperature to the MP a speed of a water pump is adjusted to control the water flow rate through the CH1 cooler.

The operation of the loop is controlled by the MP speed drive. Flow rate sCO_2 measured with a coriolis flow meter. It is possible to adjust the flow rate through the LTR by-pass so to simulate recompression cycle, as well as to adapt flow rate through the CH2 (simulating the turbine heat power release). The loop is divided into the low and high pressure part. The separation is performed by the reduction valve. The pressure in both parts is adjusted by the opening position of the valve.

To protect the loop against over pressure several pressure relief valves are installed at positions, where increase of pressure might occur. These are e.g. the heating parts equipped with closing valves both at the inlet and outlet as well as the pump.

The shut-down procedure is performed through the heating power control. The 50 K/h temperature change should be satisfied to bring the loop to the cold state (20°C). If there is a need for a repair the necessary part or the whole loop is evacuated trough the release valves and system of orifices to slow down the pressure change.

UTILIZATION OF THE CVR SCO2 LOOP

The CVR sCO_2 loop is involved in various research projects for testing of materials and equipment of the Brayton conversion cycle.

The CVR with 9 other European partners is involved in sCO_2-Flex project (2018-2020), where the main components of a 25 MWe Brayton cycle (boiler, HX, turbomachinery, instrumentation and control strategies) are being designed and optimized. The CVR role is to provide material tests, thermal-hydraulic tests of HXs (PCHXs and FPHX) and perform several design/off-design and abnormal operation to provide sufficient data for computational codes validation.

Within the European H2020 project sCO_2-HeRo (2016-2018) [64], six partners from three European countries are working on the assessment of this cycle. The goal is to numerically and experimentally prove the concept on a small-scale demonstrator which shall be incorporated in the PWR glass model at the Simulator Centre GfS in Essen, Germany. The sCO_2-HeRo is a system for safe, reliable and efficient removal of residual heat from nuclear fuel without the requirement of external power source.

Before assembling the small sCO_2-HeRo system in the GfS, each major component was tested in different institutions. The performance of the compact HX (micro channel type) was verified in the sCO_2 test loop (SCARLETT) in University of Stuttgart, while the air-cooled sink HX, compressor and turbine were measured in the CVR sCO_2 experimental facility.

Due to high flexibility of the loop layout, the loop might be easily modified and therefore can provide wide range of conditions for various experiments in terms of the operational parameters, geometry of test sections or thermal cycle simulations.

AIR COOLED SINK HEAT EXCHANGER TESTING

The heat transfer investigations in the air cooled sCO_2 finned-tube sink HX test configuration took place at CVR (Figure 4). Annex E shows the piping and instrument diagram (PID) of the sCO_2 loop and the dashed blue line stands for the sink HX testing modification to the existing loop.

Figure 4: The sink HX with measurements.

The nominal thermodynamic parameters of sink HX are shown in Table 5.

Table 5: Thermodynamic parameters of sink HX

pressure of sCO2 inlet to sink HX	7.83 MPa
temperature of sCO2 outlet of sink HX	33.0°C
temperature of sCO2 inlet to sink HX	166.0°C

DOI: 10.17185/duepublico/46075

mass flowrate of sCO2	0.325 kg/s
thermal power of sink HX	92.5 kW
temperature of air inlet to sink HX	25.0°C
temperature of air outlet of sink HX	50.0°C
volumetric flowrate of air outlet	12500.0 m^3/h
electric power of EC fans	0.33 kW

The measurement campaigns covered both supercritical and subcritical regions including transition through the pseudocritical region in the last stages of the sink HX. The critical point of the CO_2 is 7.39 MPa and 31.1°C. The controlled (independent) and resulted (dependent) parameters are summarized in Table 6.

Table 6: The main controlled and measured parameters for the performance tests

7 – 10 MPa	Pressure – inlet of sCO_2 in the sink HX – controlled
50 – 166°C	Temperature of sCO2 inlet to the sink HX – controlled
25 – 37°C	Temperature of sCO2 outlet from the sink HX – measured
0.1 – 0.32 kg/s	Mass flow rate of the sink HX – controlled
23 – 31°C	Temperature of air inlet to the sink HX – *controlled
31 – 65°C	Temperature of air outlet from the sink HX – measured
6 000 – 13 000 m^3/h	Volumetric flow rate of air outlet from the sink HX – controlled

* depends on the actual ambient temperature.

The experimentally determined heat balances from the measured parameters on both sides (sCO2 and air) are in fair agreement (±15 %) with each other which demonstrate good quality measurement. The results of calculated averaged overall heat transfer coefficients using correlations (Gnielinsky [65] for sCO_2 and IPPE [66] or VDI [67] for the air) and experimentally determined values shows for the performed tests reasonably low error of + 25 % and – 10 %. Hence, using the correlations for the estimation of the heat transfer in the sink HX with a similar design and similar conditions gives a fair error and thus is recommended. Utilizing the measured data with look-up tables for the HT of the sink HX is rather complicated to program. The analyzed correlations for heat transfer on the air side according to IPPE and VDI are in perfect match with each other. More detailed discussion of the performance is presented in the paper of Vojacek et al. [68].

TURBOMACHINE TESTING

The sCO_2 experimental loop is easy to modify and was thus used for two purposes in the sCO_2-HeRo project. After the component test of the heat sink it was also used for TAC testing. For TAC testing the sCO_2 experimental loop was redone in a way that the expansion valve was replaced with the turbine and the main pump (MP) with the compressor. The MP was then used for leakage feedback to regulate the pressure in the central housing around the bearings and the generator. The heater and recuperator arrangement was adjusted in a way that one of the recuperators (LTR) was bypassed. The reason is the lower inlet temperature of the turbine, which lies well below the cycle maximum temperature of 650 °C, and the resulting lower heating power. The complete thermodynamic design parameters of the sCO_2-HeRo TAC are summarized in Table 7. The TAC has an integrated design with turbine, generator and compressor in one casing. Thus, its general layout is similar to turbomachines of other small scale sCO2 test cycles such as the SNL RCBC, IST, TIT or SCIEL cycle, which are presented in the book of Brun et al. [61]. Mayor difference to the turbomachines of these cycles is, that the sCO2-HeRo cycle mass flow is even smaller (see Table 7). For detailed information on the TAC design please refer to Hacks et al. [69].

Table 7: Design parameters of the TAC

Component	**Parameter**	**Value**
Cycle	Mass flow	0.65 kg/s
Compressor inlet	Pressure	78.3 MPa
	Temperature	33 °C
Compressor outlet	Pressure	11.75 MPa
Turbine inlet	Pressure	11.75 MPa
	Temperature	200 °C
Turbine outlet	Pressure	7.83 MPa

Goals of the first component tests of the turbomachine in the modified loop are as follows:

- Gain experience in operating an sCO2-loop with a TAC
- Comparison of the predicted TAC behavior with the real behavior.
- Finding of a suitable strategy for turbomachine start-up and setting the operation point
- Measuring of the performance maps and comparison to the calculated performance

Prior to start-up of the TAC the cycle is brought to supercritical conditions by using the MP to circulate CO_2 through the cycle. The CO_2 is heated simultaneously to raise the pressure. Additionally, a booster pump or release valves are used for adjusting the pressure independent of the temperature and thus be more flexible in setting an operation point. Changing the pressure in the central housing to supercritical conditions reveled incompatibility of sCO_2 with grease used for lubrication. The bearings are designed as angular hybrid ball bearings. Therefore, CO_2 in the central housing must constantly be held in gaseous condition by reducing the pressure to subcritical conditions. This means that during start-up, the valves to the turbomachine are opened, only if gaseous

DOI: 10.17185/duepublico/46075

conditions are reached. At this point the pressure needs to be subcritical. If the valves are open the turbomachine is started by using the generator as motor to accelerate the shaft to the desired speed. Different acceleration rates were tested. Compared to the sCO_2 experimental loop the sCO_2-HeRo cycle design is a non-recuperated, simple Brayton cycle and thus has lower pressure losses. First performance tests showed that closed loop operation is not possible in the loop at CVR due to the additional pressure losses. This means, that the overall pressure losses would push the compressor operating point across the surge line. Performance tests of the compressor are therefore carried out in bypass operation using a control valve to throttle the flow. In this way pressure ratio and through flow rate could be adjusted. The measurements showed good agreement with the calculated performance map. The calculated pressure ratio lies within the range of measurement uncertainty. Changing the inlet conditions further showed, that decreasing the inlet temperature increases the pressure ratio. More detailed discussion of the performance is presented in the paper of Hacks et al. [70].

CONCLUSIONS

This paper comprises a comprehensive literature review of the experimental work done in sCO_2 including heat transfer and pressure drops in HXs, turbomachinery, system behavior and materials. The results of this review can be summarized as follows. The heat transfer in the supercritical region varies greatly with temperature. There has been extensive research in heated surfaces. There in the vertical flow at high heat fluxes and low mass flow rates the heat transfer deterioration occurs at near pseudo critical region. This has to do with buoyant force which disturb the turbulence. Number of authors have investigated the cooling surfaces as well. All researches observed improvement of heat transfer during cooling at the pseudo critical region. Various types of compact heat exchangers have been discussed with focus on the most effective PCHXs. Based on the literature survey, comparisons between different channel geometries reveals that the airfoil geometries appear to perform much better than the zig-zag geometries. In the past 10 years, a number of sCO_2 Brayton cycles designs and prototypes have been developed. The experimental data from small test facilities (100 kWe range) indicate that the basic design and performance predictions are sound. A few multi-MWe range are in early stage operation. The most challenging is the turbomachinery. The design is very compact due to the high pressures resulting in highly dense gas which implies extreme loads on blades. The compact design requires also high speed which makes the bearing and seal design challenging. Additional difficulties are related with the stability of the cycle and operation in off-design region. Hence, progressive engineering research and development is required to improve existing prototypes and bring the technology closer to the market.

CVR works in the sCO_2 for several years now and operates sCO_2 loop for testing of Brayton cycle. The first operational experience with the turbomachine tests of a size of 10 kWe has been given along with the heat transfer investigations in the air cooled sCO_2 finned-tube sink HX. The compressor performance measurements of the pressure ratio matched well with the CFD calculations and the heat transfer at the sink HX is predictable using the conventional 1D empirical correlation (Gnielinsky [63] for sCO_2 and IPPE [66] or VDI [67] for the air).

The described first operational experience and the data obtained from different experiments proves operability and flexibility of the loop, which may be utilized within various experimental campaigns in the field of sCO_2.

NOMENCLATURE

Abbreviation	Description
CH	Cooler
CVR	Reseach Center Rez, Czech Rebublic
FPHX	Finned plate heat exchanger
H	Heater
HPC	High pressure compressor
HT	Heat transfer
HTD	Heat transfer deterioration
HTR	High temperature heat exchanger
HX	Heat exchanger
IPPE	Institute of Physics and Power Engineering
KAPL/BAPL	Knolls Atomic Power Lab/ Bettis Atomic Power Lab & Korea Atomic Energy Research Institute
KAERI & KAIST & POSTECH	Korea Advanced Institute of Science and Technology & Korea Atomic Energy Research Institute & Pohang University of Science and Technology
LPC	Low pressure compressor
LPT	Low pressure turbine
LTR	Low temperature heat exchanger
LWR	Light water reactors
MP	Main pump
PID	Piping and instrument diagram
PCHX	Printed circuit heat exchanger
RPM	Rotation per minute
SNL RCBC	Sandia National Laboratories recompression closed Brayton cycle
TAC	Turbomachine
TIT	Test loop at Tokyo Institute of

DOI: 10.17185/duepublico/46075

	Technology
SCIEL	Supercritical CO_2 Brayton Cycle Integral Experimental Loop

ACKNOWLEDGEMENTS

This project has received funding from the European research and training programme 2014 – 2018 under grant agreement No 662116.

REFERENCES

[1] DEKHTIAREV V.L.: On designing a large, highly economical carbon dioxide power installation. Elecrtichenskie Stantskii 1962;5:1-6.

[2] FEHER E.G.: The supercritical thermodynamic power cycle. In: Proceedings of the IECEC, Florida (USA) in 1967, 1:13e15.

[3] BRINGER, R.P.; SMITH, J.M.: Heat transfer in the critical region. AIChE J. 3 (1), 49–55, 1957.

[4] PETUKHOV, B.S.; KRASNOSCHEKOV, E.A.; PROTOPOPOV, V.S.: An investigation of heat transfer to fluids flowing in pipes under supercritical conditions. In: International Developments in Heat Transfer: Papers presented at the 1961 International Heat Transfer Conference, ASME, University of Colorado, Boulder, Colorado, USA, 8–12 January, Part III, Paper 67, pp. 569–578, 1961.

[5] DUFFEY, R.B.; PIORO, I.L.: Experimental heat transfer of supercritical carbon dioxide flowing inside channels (survey), Nuclear Engineering and Design 235 (2005) 913–924.

[6] BAE, Y.Y.; KIM, H.Y.; KANG, D.J.: Forced and mixed convection heat transfer to supercritical CO_2 vertically flowing in a uniformly-heated circular tube. Experimental Thermal and Fluid Science 34 (2010) 1295-1308.

[7] BAE, Y.Y.; KIM, H.Y.; YOO, T.H.: Mixed convection heat transfer to CO_2 flowing upward and downward in a vertical tube and an annular channel. IAEA Technical Meeting, Pisa, Italy, July 5-8, 2010.

[8] KIM, J. K.; JEON, H.K.; LEE, J.S.: Wall temperature measurements with turbulent flow in heated vertical circular/non-circular channels of supercritical pressure carbon-dioxide. International Journal of Heat and Mass Transfer 50 (2007) 4908-4911.

[9] KIM, J. K.; JEON, H.K.; YOO, J.Y.; LEE, J.S.: Experimental study on heat transfer characteristics of turbulent supercritical flow in vertical circular/non-circular tubes. The 11th International Topical Meeting on Nuclear Thermal-Hydraulics (NURETH-11), Avignon, France, October 2-6, 2005.

[10] KIM, D.E.; KIM, M.H.: Experimental study of the effects of flow acceleration and buoyancy on heat transfer in a supercritical fluid flow in a circular tube. Nuclear Engineering and Design 240 (2010) 3336-3349.

[11] JIANG, P.X.; ZHANG, Y.; SHI, R.F.: Experimental and numerical investigation of convection heat transfer of CO_2 at supercritical pressures in a vertical mini-tube. International Journal of Heat and Mass Transfer 51 (2008a) 3052-3056.

[12] JIANG, P.X.; ZHANG, Y.; SHI, R.F.: Convection heat transfer of CO_2 at supercritical pressures in a vertical mini tube at relatively low Reynolds numbers. Experimental Thermal and Fluid Science 32 (2008b) 1628-1637.

[13] JIANG, P.X.; ZHANG, Y.; SHI, R.F.: Experimental and numerical investigation of convection heat transfer of CO2 at supercritical pressures in a vertical tube at low Reynolds numbers. International Journal of Thermal Sciences 47 (2008c) 998-1011.

[14] JIANG, P.X.; XU, R.N.: Convection of carbon dioxide at SCP in various scales and geometries tubes. International Meeting of Specialists on Heat Transfer to Fluids at Supercritical Pressure, Manchester, UK, 30th June – 1st July 2014.

[15] LIU, G.; HUANG, Y.; WANG, J.: Experimental investigation of the basic characteristics of superficial carbon dioxide natural circulation in a rectangular channel. The 7th International Symposium on Supercritical Water-Cooled Reactors ISSCWR-7, Helsinki, Finland, 15-18 March 2015. ISSCWR7-2030.

[16] ETER, A.; GROENEVELD, D.; TAVOULARIS, S.: Experiments on heat transfer in rod-bundle flows of CO2 at supercritical pressures. 7th International Symposium on Supercritical Water-Cooled reactors ISSCWR-7 2015, 15th-18th March 2015, Helsinki, Finland. ISSCWR7-2070.

[17] JACKSON, J.D.; HALL, W.B.: Forced convection heat transfer to fluids at supercritical pressure. In: Kakac¸, S.; Spalding, D.B. (Eds.), Turbulent Forced Convection in Channels and Bundles, vol. 2. Hemisphere Publishing Corp., New York, USA, pp. 563–612.

[18] ZAHLAN, H.; GROENEVELD, D.; TAVOULARIS, S.: Fluid-to-fluid scaling for convective heat transfer in tubes at supercritical and high subcritical pressures, International Journal of heat and mass transfer, Volume 73, 274–283, 2014.

[19] SCHMIDT, K.: Untersuchungen über die Wärmeübergangszahl von Kohlensäure im kritischen Gebiet an eine Rohrwand Zeitschrift für die gesamte Kälte-Industrie, Berlin, 1937.

[20] KRASNOSHCHEKOV E.A.; PROTOPOPOV V.S.: Local heat transfer of carbon dioxide at supercritical pressure under cooling conditions. TVT, 1969, Vol.7, Issue 5, 922-930; High Temp. 7 (5), 856–861.

[21] TANAKA, H.; NISHIWAKI, N.; HIRATA, M.: Turbulent heat transfer to supercritical carbon dioxide, Proc. Japan Sot. Mech. Engrs Semi-lnt. Symp.. Tokyo, Heat Mass Transfer, Vol. 2, 127 (1967).

DOI: 10.17185/duepublico/46075

[22] BASKOV V.L.; KURAEVA I.V.; PROTOPOPOV V.S.: Heat transfer with the turbulent flow of a liquid at supercritical pressure in tubes under cooling conditions. High Temperature (translated from Teplofizika Vysokikh Temperatur) 1977; 15(1):81–6.
[23] PETROV, N.E.; POPOV, V.N.: Heat transfer and resistance of carbon dioxide being, cooled in the supercritical region, Thermal Engineering 32 (3) (1985).
[24] PETROV, N.E.; POPOV, V.N.: Heat transfer and hydraulic resistance with turbulent flow in a tube of water under supercritical parameters of state, Thermal Engineering 35 (5-6) (1988) 577-580.
[25] PITLA, S.S.; GROLL, E.A., ROBINSON, D.M.; RAMADHYANI, S.: Heat transfer from supercritical Carbone Dioxide in tube flow: A critical review, HVAC&R Research; Jul 1998; 4, 3; ProQuest Central pg. 281.
[26] PETTERSEN, J.; RIEBERER, R.; MUNKEJORD, S.T.: Heat transfer and pressure drop for flow of supercritical and subcritical CO2 in microchannel tubes, SINTEF Energy Research, Trondheim, February, 2000.
[27] OLSON, D.A.: Heat Transfer of supercritical Carbon Dioxide flowing in a cooled horizontal tube, NIST, Gaithersburg, May, 2000.
[28] ZINGERLI, A.; GROLL, E.A.: Influence of refrigeration oil on the heat transfer and pressure drop of supercritical CO2 during in-tube cooling, in: Proceedings of the Fourth IIR-Gustav Lorentzen Conference, Purdue, IN, 2000, pp. 269–278.
[29] YIN, J.M.; BULLARD, W.B.; HRNJAK, P.S.: R-744 gas cooler model development and validation. International Journal of Refrigeration 24 (2001) 692-701.
[30] LIAO, S.M.; ZHAO, T.S.: Measurement of heat transfer coefficients from supercritical carbon dioxide flowing in horizontal mini/micro channels, J. Heat Transfer 124 (2002) 413–420.
[31] GAO, L.; HONDA, T.: Experiments on heat transfer characteristics of heat exchanger for CO2 heat pump system, in: Proceedings of the Asian Conference on Refrigeration and Air Conditioning, Kobe, 2002, pp. 75–80.
[32] MORI, K.; ONISHI, J.; SHIMAOKA, H.; NAKANISHI, S.; KIMOTO, H.: Cooling heat transfer characteristics of CO2 and CO2–oil mixture at supercritical pressure conditions, in: Proceedings of the Asian Conference on Refrigeration and Air Conditioning, Kobe, 2002, pp. 81–86.
[33] YOON, S.H.; KIM, J.H.; HWANG, Y.W.; KIM, M.S.; MIN, K.; KIM, Y.: Heat transfer and pressure drop characteristics during the in-tube cooling process of carbon dioxide in the supercritical region, Int. J. Refrig. 26 (2003) 857–864.
[34] DANG, CH.; HIHARA, E.: In-tube cooling heat transfer of supercritical carbon dioxide. Part 1. Experimental measurement. International Journal of Refrigeration 27 (2004) 736–747.
[35] HUAI, XL; KOYAMA, S.; ZHAO, T.S.: An experimental study of flow and heat transfer of supercritical carbon dioxide in multi-port mini channels under cooling conditions, Chemical Engineering Science 60 (2005) 3337 – 3345.
[36] KUANG, G.: Heat transfer and mechanical design analysis of supercritical gas gooling process of CO2 in microchannels, Doctorate Thesis, University of Maryland. 2006.
[37] YUN, R.; HWANF, Y.; RADERMACHER, R.: Convective gas cooling heat transfer and pressure drop
[38] characteristics of supercritical CO2/oil mixture in a minichannel tube, Int. J. Heat Mass Transfer 50 (2007) 4796–4804.
[39] BRUCH, A.; BONTEMPS, A.; COLASSON, S.: Experimental investigation of heat transfer of supercritical carbon dioxide flowing in a cooled vertical tube, International Journal of Heat and Mass Transfer 52 (2009) 2589–2598.
[40] OH, H.K.; SON, C.H.: New correlation to predict the heat transfer coefficient in tube cooling of supercritical CO2 in horizontal macro-tubes, Experimental Thermal and Fluid Science 34 (8) (2010) 1230e1241.
[41] ELDIK, M.; HARRIS, P.M.; KAISER, W.H., ROUSSEAU, P.G.: Theoretical And Experimental Analysis Of Supercritical Carbon Dioxide, 15th International Refrigeration and Air Conditioning Conference at Purdue, July 14-17, 2014.
[42] GE, Y.T.; TASSOU, S.A.; SANTOSA, I.D.; TSAMOS, K.: Design optimisation of CO2 gas cooler/condenser in a refrigeration system. Applied Energy 2015;160:973–81.
[43] HO, D.; DANG, T.; LE, CH.; NGUYEN, T.: An experimental comparison between a microchannel cooler and conventional coolers of a C02 air conditioning cycle, in: 2017 International Conference on System Science and Engineering, Ho Chi Minh, Vietnam, July 21-23, 2017.
[44] ANGELINO G.: Carbon dioxide condensation cycles for power production. J Eng Gas Turb Power 1968;89(2):229-37.
[45] KIMZEY, G.; Development of a Brayton Bottoming Cycle using Supercritical Carbon Dioxide as the Working Fluid, Electric power research institute, Palo Alto, California, 2012.
[46] DOSTAL V.: A supercritical carbon dioxide cycle for next generation nuclear reactors [Ph.D. thesis]. Department of Nuclear Engineering, Massachusetts Institute of Technology (MIT); 2004
[47] JOHNSTON, A. ET AL.: Printed circuit heat exchangers for energy conservation, End of Grant Report No 519, National Energy Research, Development and Demonstration Program, Australia, 1985.
[48] SOUTHALL, D.; LE PIERRES, R.; DEWSON, S.J.: Design Considerations for Compact Heat Exchangers, Proceedings of ICAPP ’08, Anaheim, CA USA, June 8-12, 2008.
[49] LE PIERRES, R.; SOUTHALL, D.; OSBORNE, S.: Impact of Mechanical Design Issues on Printed Circuit Heat Exchangers, Proceedings of SCO2 Power Cycle Symposium 2011, University of Colorado at Boulder, CO, May 24-25, 2011.

 DOI: 10.17185/duepublico/46075

[50] NIKITIN, K.; KATO, Y.; NGO L.: Printed circuit heat exchanger thermal–hydraulic performance in supercritical CO2 experimental loop. International Journal of Refrigeration 29, no. 5 (2006): 807-814.
[51] NGO, T.L.; KATO, Y.; NIKITIN K.; ISHIZUKA, T.: Heat transfer and pressure drop correlations of microchannel heat exchangers with S-shaped and zigzag fins for carbon dioxide cycles, Experimental Thermal and Fluid Science, vol. 32, no. 2, pp. 560-570, 2007.
[52] MOISSEYTSEV, A.; J. J. SIENICKI; CHO, D.H.; THOMASA, M.R.: Comparison of heat exchanger modeling with data from CO2-to-CO2 printed circuit heat exchanger performance tests. In Proceedings of the 2010 International Congress on Advances in Nuclear Power Plants-ICAPP'10. 2010.
[53] KRUIZENGA, A.M.: Heat transfer and pressure drop measurements in prototypic heat exchanger for the supercritical carbon dioxide Brayton power cycles, Ph.D. Thesis, University of Wisconsin – Madison, 2010.
[54] KATO, Y: How New Microchannel Heat Exchanger Reduced Pressure Drop to 1/6 Inheriting High Heat Transfer Performance, Supercritical CO2 Power Cycle Symposium, May 24-25, 2011, Boulder, Colorado.
[55] ANDERSON, M.; NELLIS, G.; CORRADINI, M.: Materials, Turbomachinery and heat exchangers for supercritical CO2 systems, University of Wisconsin – Madison, Award Number: 88234, Project Number: 09-778, Oct. 30, 2012.
[56] BAIK, S.; KIM, S.G.; SON, S.;KIM, H.T. LEE, J.I.:Printed Circuit Heat Exchanger Design, Analysis and Experiment, NURETH-16, Chicago, IL, August 30-September 4, 2015.
[57] RANJAN, D.: Fundamental study of key issues related to advanced sCO2 Brayton cycle: Prototypic HX development and cavitation, Final report for NEUP project 14-6670, Georgia Institute of Technology, Atlanta 2016.
[58] STRÄTZ, M.: Performance data of a compact heat exchanger, Deliverable 2.2, sCO2-HeRo-Project, Grant agreement No 662116, 2017.
[59] WRIGHT, S.A.; RADEL, R.F.; VERNON, M.E.; ROCHAU, G.E.; PICKARD, P.S.: Operation and Analysis of a Supercritical CO2 Brayton Cycle, SAND2010-0171, Albuquerque, New Mexico, Sep. 2010.
[60] HELD, T.J.: Commercialization of Supercritical CO2 (sCO2) Power Cycles, 1st European Seminar on "Supercritical CO2 Power Systems", TU Vienna, 29-30 Sep 2016.
[61] BRUN K.; FRIEDMAN P.; DENNIS R.: Fundamentals and Applications of Supercritical Carbon Dioxide (SCO2) Based Power Cycles. 1st edition, Elsevier Science & Technology, 2017.
[62] AHN, Y.; LEE, J.; KUM, S.G.; LEE, I.J.; CHA, J.E.; LEE, S.W.: Design consideration of supercritical CO2 power cycle integral experiment loop, Energy 86 (2015) 115-127.
[63] MOORE, J.; BRUN, K.; EVANS, N.; KALRA, C.: 2015. Development of 1 MWe supercritical CO2 test loop. In: Proc. ASME Turbo Expo GT2015-43771, Montreal, Canada.
[64] http://www.sco2-hero.eu/
[65] GNIELINSKI, V.: New equations for heat and mass transfer in turbulent, pipe and channel flow. Int Chem Eng 16:359–368, 1976.
[66] ZUKAUSKAS, A.A.: Konvektivnyj perenos v teploobmennikach. Nauka, Moskva 1982.
[67] VDI-Heat Atlas, Second edition, Springer-Verlag Berlin Heidelberg 2010.
[68] VOJACEK, A. ET. AL.: Performance test of the air cooled finned-tube sCO2 sink heat exchanger, ASME Journal of Heat Transfer, 2018, pending.
[69] HACKS, A. J.; SCHUSTER, S.; DOHMEN H. J.; BENRA F.-K.; BRILLERT D.: Turbomachine Design for Supercritical Carbon Dioxide within the sCO2-HeRo.eu Project. GT2018-75154, ASME Turbo Expo, Sweden, Oslo 2018.
[70] HACKS A. J.; VOJACEK A.; DOHMEN H. J.; BRILLERT D.: Experimental Investigation of the sCO2-HeRo Compressor. 2018-sCO2.eu-115, 2nd European supercritical CO2 Conference, August, 2018.

DOI: 10.17185/duepublico/46075

ANNEX A

RECENTLY BUILT EXPERIMENTAL SCO2 FACILITIES FOR HT INVESTIGATION TO HEATED SURFACES NEAR PSEUDO-CRITICAL POINT

Table 8: Recently built experimental sCO_2 facilities for HT investigation to heated surfaces near pseudo-critical point

Year	Country	Facility	Parameters	Geometry and flow
2005	South Korea	SPHINX (KAERI), [6]-[7]	7.75÷8.12 MPa, inlet 5÷39 °C, 285÷1200 kg/m2/s, 30÷170 kW/m2	Vertical upward/downward flow, Ø 4.4/4.57/6.32/ 9.0mm, annulus 8 x 10 mm
2008	China	Tsinghua University, [11]-[12] 2008	8.6 MPa, inlet 25÷30°C, 388÷582 kg/m2/s, 27÷549 kW/m2	Vertical upward/downward flow, Ø 0.27 mm
2008		Tsinghua University, [13] 2008	8.6 – 9.5 MPa, inlet 23 ÷ 36 °C, 6.3 – 6.6 kg/m2/s, 4.5÷94 kW/m2	Vertical upward/downward flow, Ø 2 mm
2010	South Korea	SPHINX (KAERI), [6]-[7]	7.75÷8.12 MPa, inlet 5÷39 °C, 285÷1200 kg/m2/s, 30÷170 kW/m2	Vertical upward/downward flow, Ø 4.4/4.57/6.32/ 9.0mm, annulus 8 x 10 mm
2010		Pohang University, [10]	7.5÷10.3 MPa, inlet 29 °C, 208÷874 kg/m2/s, 38÷234 kW/m2	Vertical upward flow, Ø 4.5 mm
2014	China	Tsinghua University, [14]	7.6 MPa, inlet 22÷34 °C, 230–354 kg/m2/s, 12÷63 kW/m2	Vertical upward/downward flow, Ø 1 mm
2015		Nuclear Power Institute of China, Sichuan, Natural circulation loop, [15]	8.2÷10.2 MPa, inlet 27÷30 °C, 245–393 kg/m2/s, 4÷53 kW/m2	Vertical upward flow, Ø 6 mm
2015	Canada	SCUOL Ottawa, [16]	6.6÷8.36 MPa, 11÷30 °C, 330÷1173 kg/m2/s, 56÷175 kW/m2	Vertical upward flow, 3 rods (Ø 10 mm) bundle in Ø 25.4 mm

ANNEX B

EXPERIMENTAL SCO2 FACILITIES FOR HT INVESTIGATION IN COOLERS

Table 9: Experiments in sCO2 facilities for HT investigation in coolers (chronologically ordered)

Year	Country	Facility	Parameters	Geometry and flow
1937	Germany	Berlin, [19]	6÷7.4 MPa, temperature close to critical temperature (no superheating), 0.05÷0.3 m/s	Vertical downward flow, Circular tube
1969	Russia	Moscow Power Engineering Institute [20]	8÷12 MPa, 29÷214 °C, Re=(900÷3200) x 10^3, 120÷1110 kW/m^2	Horizontal flow, Ø 2.22 mm
1967	Japan	University of Tokyo, [21]	-	Vertical downward flow, Circular tube Ø 6 mm
1977	Russia	Moscow Power Engineering Institute [22]	8÷12 MPa, 17÷212 °C, 1560÷4170 kg/m^2/s, up to 640 kW/m^2	Vertical upward/downward flow, Ø 4.12 mm
1985	Russia	Moscow, [23]	7.85÷12 MPa, 20÷248 °C, 450÷4000 kg/m^2/s,	-

DOI: 10.17185/duepublico/46075

			14÷1000 kW/m^2	
1985	Russia	Moscow, [24]	7.85÷12 MPa, 20÷248 °C, 450÷4000 kg/m^2/s, 14÷1000 kW/m^2	-
1998	USA	Purdue University, [25]	8.4÷11.4 MPa, 20÷124 °C, 1200÷2400 kg/m^2/s	Horizontal flow, Ø 4.7 mm
2000	Norway	SINTEF Energy Research, [26]	8.1÷10.1 MPa, 15÷70 °C, 600÷1200 kg/m^2/s, 10÷20 kW/m^2	Horizontal flow, Multi-port extruded circular tube, Ø 0.79 mm
2000	USA	NIST, [27]	7.8÷13.4 MPa, 23÷87 °C, 200÷900 kg/m^2/s, 1.78÷6.22 kW	Horizontal flow, Ø 10.9 mm
2000	USA	Purdue University, [28]	8÷12 MPa, 100÷125 °C, 1700÷5100 kg/m^2/s	Horizontal flow, Ø 2.75 mm
2001	USA	University of Illinois, [29]	7.7÷14.4 MPa, 33÷140 °C, 0.45÷0.71 kg/s	Horizontal flow, Multi-port extruded circular tube, Ø 0.79 mm
2002	China	Hong Kong, University of Science and Technology, [30]	7.4÷12 MPa, 20÷110 °C, 0.02÷0.2 kg/min., 10÷200 kW/m^2	Horizontal flow, Ø 0.5÷2.16 mm
2002	Japan	Tokyo, [31]	7.6÷9.6 MPa, 20÷100 °C, 330÷680 kg/m^2/s	Horizontal flow, Ø 5 mm
2002	Japan	Tokyo, [32]	9.5 MPa, 20÷70 °C, 100÷500 kg/m^2/s	Horizontal flow, Ø 4÷8 mm
2003	South Korea	Seoul, [33]	7.5÷8.8 MPa, 50÷80 °C, 225÷450 kg/m^2/s	Horizontal flow, Ø 7.7 mm
2004	Japan	Tokyo, National Institute of Advanced Industrial Science and Technology, [34]	8÷10 MPa, 5÷70 °C, 200÷1200 kg/m^2/s, 6÷33 kW/m^2	Horizontal flow, Ø 1÷6 mm
2005	China	Beijing, Chinese Academy of Science, [35]	7.4÷8.5 MPa, 22÷53 °C, 110÷420 kg/m^2/s, 0.8÷9 kW/m^2	Horizontal flow, Multi-port extruded circular tube, Ø 1.31 mm
2006	USA	University of Maryland, [36]	8÷10 MPa, 25÷50 °C, 300÷1200 kg/m^2/s, 20÷25 kW/m^2	Horizontal flow, Multi-port extruded circular tube, Ø 0.79 mm
2007	USA	University of Maryland, [37]	8.4÷10.4 MPa, 40÷80 °C, 200÷400 kg/m^2/s, 20÷25 kW/m^2	Horizontal flow, Multi-port extruded circular tube, Ø 1 mm
2008	France	CEA-Grenoble, Laboratoire Greth, [39]	7.4÷12 MPa, 15÷70 °C, 50÷590 kg/m^2/s	Vertical flow, upward/downward flow, Ø 6 mm
2010	South Korea	San, Pukyong National University, [40]	7.5÷10 MPa, 20÷100 °C, 200÷600 kg/m^2/s	Horizontal flow, Ø 4.55÷7.75 mm
2014	South Africa	Potchefstroom North-West University, [41]	8÷11 MPa, 34÷120 °C, Re = Re=(350÷680) x 10^3	Horizontal flow, Ø 16 mm
2015	UK	Brunel University, Uxbridge, [42]	7.6÷8.7 MPa, 30÷105 °C, 980÷1180 kg/m^2/s	Horizontal flow, finned tube HX Ø 6.7 mm
2017	Vietnam	HCMC University of Technology and Education, [43]	7.7÷8.6 MPa, 32÷56 °C	Horizontal flow, finned tube HX Ø 7.8/4.8 mm, finned plate HX – multiport micro-channel height 0.6 mm, width 1.2 mm

ANNEX C

EXPERIMENTAL SCO2 FACILITIES FOR HT INVESTIGATION IN PCHX

Table 10: Experiments in sCO2 facilities for HT investigation in PCHX (chronologically ordered)

DOI: 10.17185/duepublico/46075

Year	Country	Facility	Parameters	Geometry and flow
2005	Japan	Tokyo Institute of Technology, [50]	Hot side 2.2÷3.2 MPa, inlet 280÷300°C, 0.011÷0.022 kg/s, 65÷130 kg/m^2/s Cold side 6.5÷10.5 MPa, inlet 90÷108°C, 0.011÷0.022 kg/s, 161÷322 kg/m^2/s	Horizontal flow Zig-zag channel: Hot side fin gap 1.9 mm, channel depth 0.9 mm, wave length 9 mm, pitch 2.964 mm, angle 32.5°, Cold side fin gap 1.8 mm, channel depth 0.9 mm, wave length 7.24 mm, pitch 3.263 mm, angle 40°
2007	Japan	Tokyo Institute of Technology, [51]	Hot side 6 MPa, inlet 120°C, 0.011÷0.042 kg/s, 93÷356 kg/m^2/s Cold side 7.7÷12 MPa, inlet 35÷55°C, 0.011÷0.042 kg/s, 93÷356 kg/m^2/s	Horizontal flow S-shape channels: Hot/cold side fin gap 1.31 mm, channel depth 0.94 mm, wave length 7.565 mm, pitch 3.426 mm, angle 52°, Horizontal flow Zig-zag channels: Hot/cold side fin gap 1.31 mm, channel depth 0.94 mm, wave length 7.565 mm, pitch 3.426 mm, angle 52°
2010	USA	Argonne National Laboratory, [52]	Hot side 7.9÷8.5 MPa, inlet 154÷161°C, 0.085÷0.091 kg/s, Cold side 11.3÷20 MPa, inlet 40.7÷48.8°C, 0.054÷0.064 kg/s	Horizontal flow Zig-zag channels: Hot side fin gap 1.5 mm, channel depth 0.75 mm, angle 38°, 45° (estimated)
2010	USA	University of Wisconsin, [53]	Only 1 plate Hot side of sCO_2 (surrounded 2 plates top/bottom with cold water) 7.5÷8.1 MPa, inlet 20÷100 °C, 326÷762 kg/m^2/s, 12÷36 kW/m^2	Horizontal/vertical (downward/upward) flow Straight channel: Hot side fin gap 1.9 mm Zig-zag channel: Hot side fin gap 1.9 mm, channel depth 0.9 mm, wave length 9 mm, pitch 2.964 mm, angle 32.5°, Horizontal flow Zig-zag channel: Hot side fin gap 1.9 mm, channel depth 0.9 mm, wave length 7.24 mm, pitch 3.263 mm, angle 40°
2011	Japan	Tokyo Institute of Technology, [54]	-	Horizontal flow Zig-zag, sinuous curve, S-shape, modified louvered, louvered channels
2012	USA	University of Wisconsin, [55]	Only 1 plate (surrounded 2 plates top/bottom with cold water) 6÷12 MPa, inlet 16÷105 °C, 210÷1200 kg/m^2/s	Horizontal flow 8.1 mm NACA0020 4 mm NACA0020
2015	South	KAIST, [56]	Hot side sCO_2/cold side water	Horizontal flow

DOI: 10.17185/duepublico/46075

	Korea		7.3÷8.5 MPa, inlet 25÷40 °C, Re=2000÷58000	Zig-zag channel: Hot/cold side fin gap 1.8 mm, channel depth 0.75 mm, wave length 9 mm, pitch 2.964 mm, angle 32.5°
2016	USA	Atlanta, Georgia Institute of Technology, [57]	Only 1 plate (surrounded 2 plates top/bottom with cold water) 7.5÷8.1 MPa, inlet 12÷135 °C, 220÷660 kg/m^2/s	Horizontal flow 8.1 mm NACA0020 9 mm Offset fin
2017	Germany	SCARLETT, University of Stuttgart, [58]	sCO_2 heated up by steam 9.5÷11 MPa, inlet 40 °C, 1233÷2267 kg/m^2/s	Straight channel Hot side/cold side fin gap 2 mm, channel depth 1 mm

ANNEX D

THE DESIGN COMPARISON OF SCO2 INTEGRAL TEST LOOPS

Table 11: The design comparison of SCO2 integral test loops

Facility	**Turbomachinery**	**Cycle layout**	**Heat power [kW]**	**Efficiency [-]**	**Mass flow rate [kg/s]**	**Turbine intet temp. [°C]**	**Pressure ratio [-]**	**Rpm [rmp x 10^{-3}]**
SNL, [61], [62]	2 x TAC, (2x100 kWe net target),	Recompr.	780	0.315 (target)	3.5 (target) / 2.7(achieved)	537 (target) / 342(achieved)	1.8 (target) / 1.65 (achieved)	75 (target) / 52 (achieved)
KAPL / BAPL, [61], [62]	1 x TAC + 1 x turbine (target 100 kWe net), (40 kWe net achieved)	Simple recuper.	834.9	0.147 (target)	5.35 (target) / 3.54 (achieved)	300 (target)	1.8 (target) / 1.44 (achieved)	75(target)/60 (achieved)
TIT, [61], [62]	1 x TAC (10 kWe net achieved)	Simple recuper.	160	0.07 (achieved)	1.1 (achieved)	277 (achieved)	1.4 (achieved)	69 (achieved)
KAERI & KAIST & POSTECH (SCIEL), [61], [62]	1 x TAC (HPC&HPT), 1 x turbine (LPT), 1 x compressor (LPC), (250 kWe net target)	Simple recuper.	1320	0.225 (target)	6.4 (target)	500 (target)	2.67 (target)	75 (LPT), 70 (LPC), 68 (HPT & HPC) (target)
SunShot, [61], [63]	1 x compressor (standard), 1 x turbine (target 1 MWe net)	Simple recuper.	2600	-	8.4 (target)	715 (target)	2.9 (target)	27 (turbine) (target)
Echogen (EPS100), [61]	1 x TAC, 1 x turbine (10 MWe net target) (3 MWe net achieved)	Simple recuper.	25000 (target)	-	-	485 (target)	-	30

DOI: 10.17185/duepublico/46075

ANNEX E

EXPERIMENTAL SCO2 FACILITIES FOR HT INVESTIGATION IN PCHX RECUPERATORS

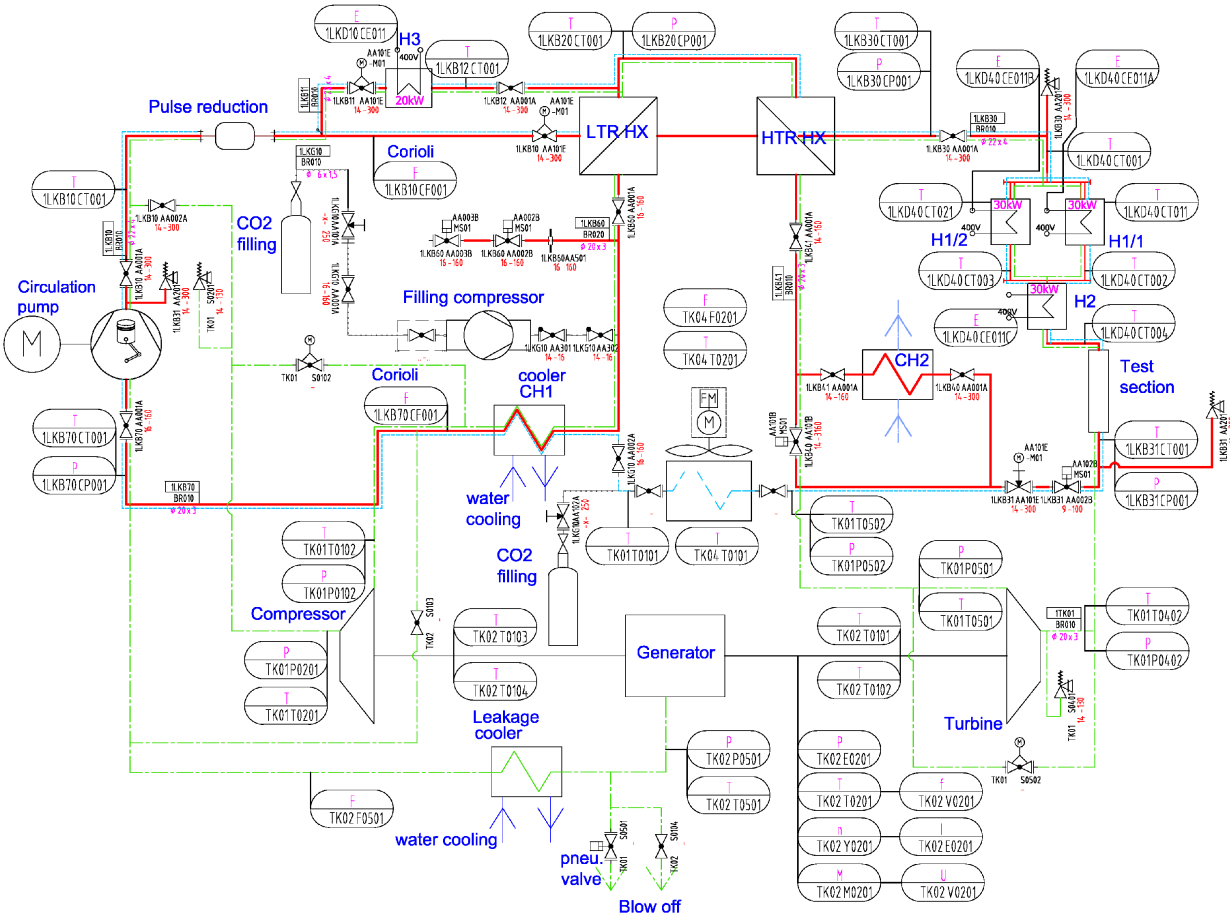

Figure 5: PID of the sCO2 loop in CVR

DOI: 10.17185/duepublico/46075