MODELING A HYDRAULIC DRIVE USING NEURAL NETWORKS

Carsten Otto

Department of Measurement and Control (Prof. Dr. H. Schwarz)
University of Duisburg, 47048 Duisburg, Germany
e-mail: co@uni-duisburg.de

Abstract This paper presents the nonlinear black box modeling of a hydraulic translatory drive using neural networks. The type of neural network employed here is the multilayer perceptron. Feeding previous inputs and outputs into the network leads to two different black box model structures, namely the series-parallel and the parallel model. Their suitability for modeling the hydraulic drive on the basis of measurements on a test bed is compared.

1 Introduction

Modeling of technical systems using physical laws can be quite difficult if there is not enough physical insight to the system or if the resulting mathematical equations become too complex. If only the input-output behaviour of the system is of interest and knowledge is gathered from experimental data, it is useful to choose a black box approach to obtain a model of the technical system [8]. In recent years artificial neural networks have gained importance in nonlinear black box modeling [1], [6], [7].

The multilayer perceptron, which is one of the most popular types of artificial neural networks, is known to be a universal approximator of nonlinear relationships [3]. In order to model the dynamic behaviour of the underlying system, historical information, i. e. past inputs and outputs, has to be used as input into the network. In this context two different nonlinear black box model structures can be considered: the series-parallel model, using past inputs and *measured* outputs $y(k-j)$, and the parallel model, using past inputs and *predicted* outputs $\hat{y}(k-j)$. The objective of this paper is to discuss these two black box model structures for modeling a hydraulic translatory drive with the multilayer perceptron.

Section 2 describes the multilayer perceptron used in this paper and in section 3 the two black box model structures will be introduced. Section 4 illustrates the hydraulic translatory drive and section 5 presents the results of modeling the drive. The paper closes with a summary.

2 Neural networks

Neural networks can be described as signal processing systems made up of simple units, which communicate through weighted connections. The multilayer perceptron (MLP) is one of the most popular types of neural networks. Here, the units are arranged into one or more hidden layers and an output layer. Units within successive layers are coupled by weighted connections. The input signals propagate through the network in a forward direction [2].

Fig. 1(a) depicts the structure of a unit in layer s. It is fed by all output signals $y_{s-1,i}$ from the n units of the preceding layer and calculates the activation potential

$$v_{s,j} = w_{0j} y_{s-1,0} + \sum_{i=1}^{n} y_{s-1,i} w_{ij} \ , \tag{1}$$

using the weights w_{ij}. The activation function $g(v_{s,j})$ calculates the activation $a_{s,j}$, which is sent as an output $y_{s,j}$ to the units of the subsequent layer. A bias is applied to the unit, represented by a constant signal $y_{s-1,0} = 1$ and its weight w_{0j}.

This paper deals with MLPs consisting of one hidden layer and a single unit in the output layer (fig. 1(b)). The hyperbolic tangent function is used as the activation function $g(v_{s,j}) = \tanh v_{s,j}$ for

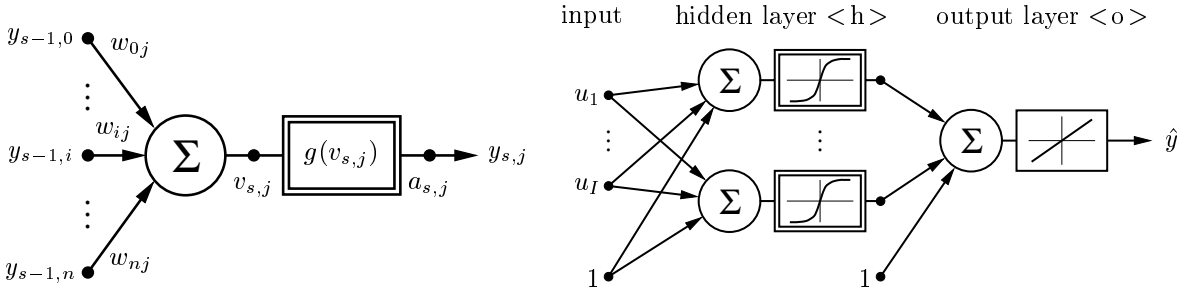

(a) Unit (b) Network

Figure 1: Multilayer Perceptron (MLP)

the units in the hidden layer, while the identity function is applied to the output unit. The functional relationship between the output $\hat{y}$ and the input $\boldsymbol{u} = [u_1, \ldots, u_I]$ is given by

$$\hat{y}(\boldsymbol{u}, \boldsymbol{w}) = w_{01}^{<\mathrm{o}>} + \sum_{j=1}^{H} w_{j1}^{<\mathrm{o}>} \tanh\Big(w_{0j}^{<\mathrm{h}>} + \sum_{i=1}^{I} w_{ij}^{<\mathrm{h}>} u_i \Big) \,, \tag{2}$$

where I denotes the number of input signals and H the number of hidden units. During a training phase the MLP learns the functional relationship (2) on the basis of N measured data points. The aim of learning algorithms is to minimize some error criteria, for example the average squared error

$$V = \frac{1}{N} \sum_{p=1}^{N} \big(y_p - \hat{y}_p \big)^2 \,. \tag{3}$$

In this contribution, minimization of (3) is achieved using the Levenberg-Marquardt method [7].

3 Black box models

In order to model the dynamic behaviour of technical processes, historical information, i. e. past inputs and past outputs, has to be used as input to the MLP. The resulting dynamic behaviour of the MLP is essentially influenced by the way the output is fed back into the network. Two approaches often discussed in the literature are the series-parallel and the parallel model [5], also named NARX and NOE models

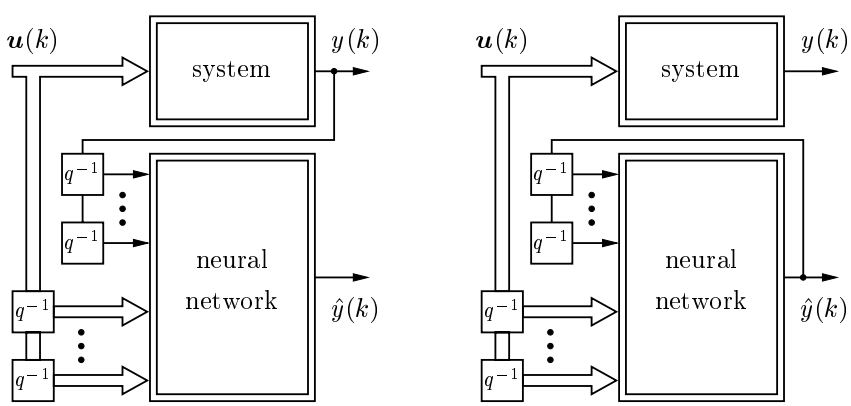

(a) Series-parallel model (b) Parallel model

Figure 2: Black box models

respectively [9]. In the case of the parallel model in fig. 2(b) the predicted output is fed back as input to the model, i. e. there is complete parallelism between model and system, while parallelism for the series-parallel model in fig. 2(a) is only given regarding the input.

Both approaches can be used for identification of a model as well as for validation. The calculation of the gradients for optimization of (3) is far more complex for identification of a parallel model, since the output depends on previous outputs. The identification of a series-parallel model results generally in higher accuracy. However, regarding the validation aspect it can be more suitable to identify a parallel model as will be shown in section 5.

4 Description of the hydraulic drive

The hydraulic translatory drive depicted in fig. 3 consists of a synchronized cylinder and a servo valve, that controls the oil pressure inside the two cylinder chambers and is actuated by the voltage u. The task is to predict the velocity v of the piston depending on u. Identification data is gathered by actuating

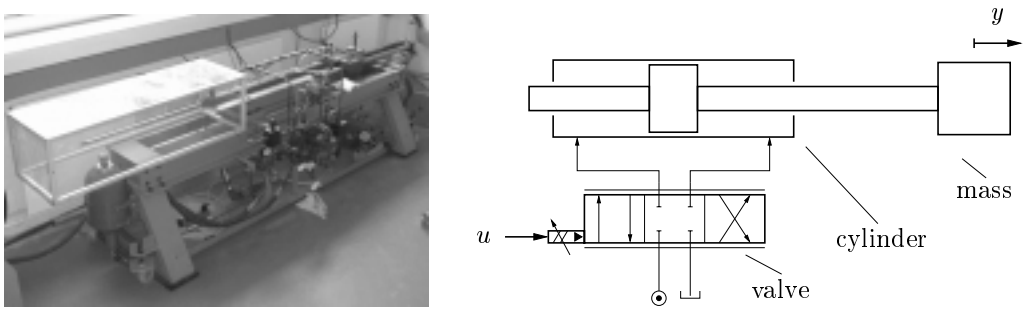

(a) Test bed (b) Schematic diagram

Figure 3: Hydraulic drive

the drive with an amplitude modulated pseudo random signal. Data for validation consists of several step responses. For black box modeling, the input $u(k-4)$ and the outputs $v(k-1), \ldots, v(k-4)$ and $\hat{v}(k-1), \ldots, \hat{v}(k-4)$ respectively are used as regressors. For further details on the drive and regressor structure see [4].

5 Modeling results

This section presents the results of modeling the hydraulic drive with a MLP using 6 units in the hidden layer turning out a model having 43 parameters (weights of the MLP). The identification is done as a series-parallel model as well as a parallel model. Each of the two resulting models is then validated in series-parallel mode and in parallel mode in order to compare them.

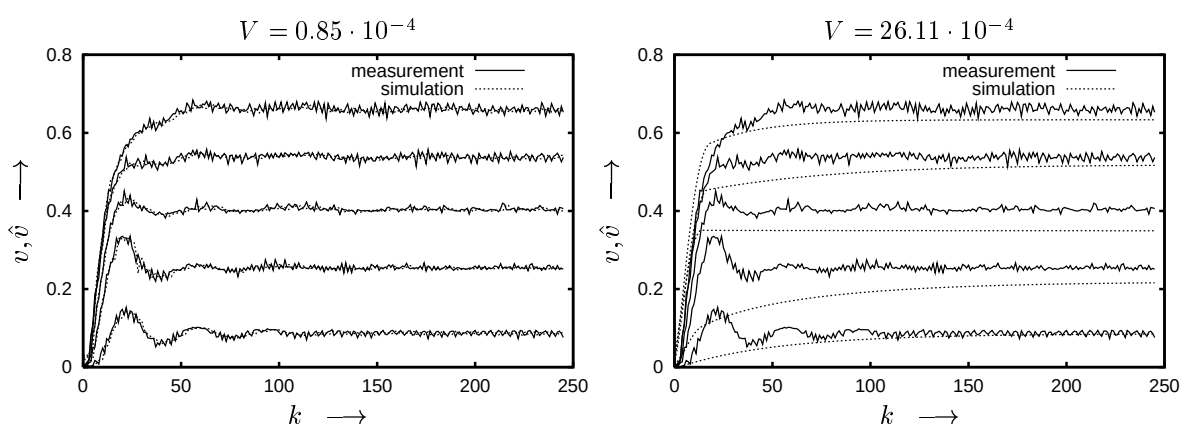

(a) Series-parallel mode validation (b) Parallel mode validation

Figure 4: Results for the series-parallel model

The validation results for modeling the drive in series-parallel mode are shown in fig. 4 and the validation results for modeling in parallel mode are shown in fig. 5. Comparing the case the model is validated in the same mode for which it was identified (fig. 4(a) for the series-parallel model and fig. 5(b) for the parallel model), the series-parallel structure leads to higher accuracy. But comparing the case the models are validated using the opposite mode, the series-parallel model (fig. 4(b)) is unstable, whereas the parallel model (fig. 5(a)) still yields satisfactory results.

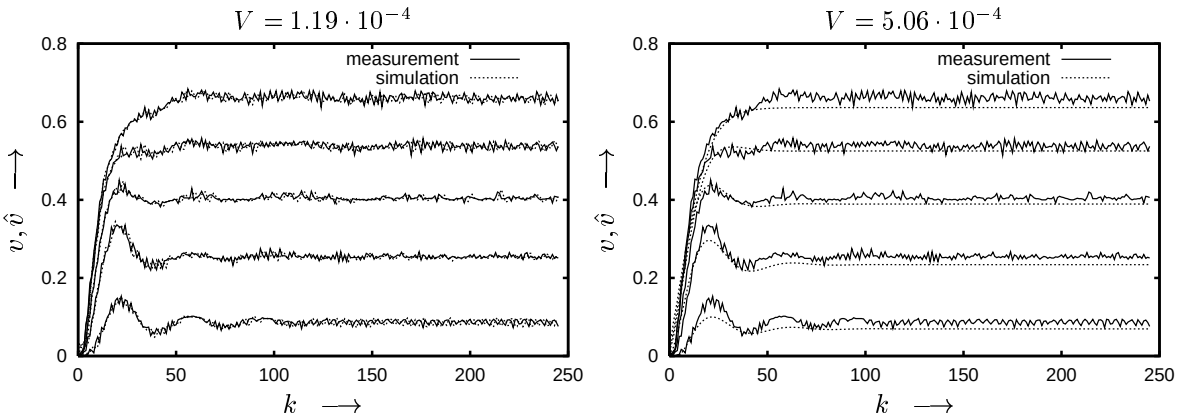

(a) Series-parallel mode validation

(b) Parallel mode validation

Figure 5: Results for the parallel model

6 Summary

Neural networks provide a good approach for nonlinear black box modeling of technical processes, as is shown in this paper for a hydraulic translatory drive. However, the user has to decide which kind of black box structure to apply. As the results in this contribution show, if the measurement of the system's output is not desired and the model is running in parallel mode, it is more suitable in practice to identify the model in parallel mode as well, although the identification procedure becomes more complex.

References

[1] Mihiar Ayoubi. *Nonlinear System Identification Based on Neural Networks with Locally Distributed Dynamics and Applications to Technical Processes.* Fortschritt-Berichte VDI Reihe 8 Nr. 591. VDI, Düsseldorf, 1996.

[2] Simon Haykin. *Neural Networks.* Prentice-Hall, New Jersey, 1999.

[3] Kurt Hornik, Maxwell Stinchcombe, and Halbert White. Multilayer feedforward networks are universal approximators. *Neural Networks*, 2:359–366, 1989.

[4] Andreas Kroll and Angelika Agte. Modellierung hydraulischer Antriebe durch Fuzzy-Modelle. *Ölhydraulik und Pneumatik*, 41(6):414–416, 1997.

[5] Kumpati S. Narendra and Kannan Parthasarathy. Identification and control of dynamical systems using neural networks. *IEEE Trans. on Neural Networks*, 1(1):4–27, 1990.

[6] Oliver Nelles. *Nonlinear System Identification with Local Linear Neuro-Fuzzy Models.* Berichte aus der Automatisierungstechnik. Shaker, Aachen, 1999.

[7] Magnus Nørgaard. *System Identification and Control with Neural Networks.* Ph.d. thesis, Department of Automation, Technical University of Denmark, Lyngby, Denmark, 1996.

[8] Helmut Schwarz. *Einführung in die Systemtheorie nichtlinearer Regelungen.* Shaker, Aachen, 1999.

[9] Jonas Sjöberg et al. Nonlinear black-box modeling in system identification: a unified overview. *Automatica*, 31(12):1691–1724, 1995.